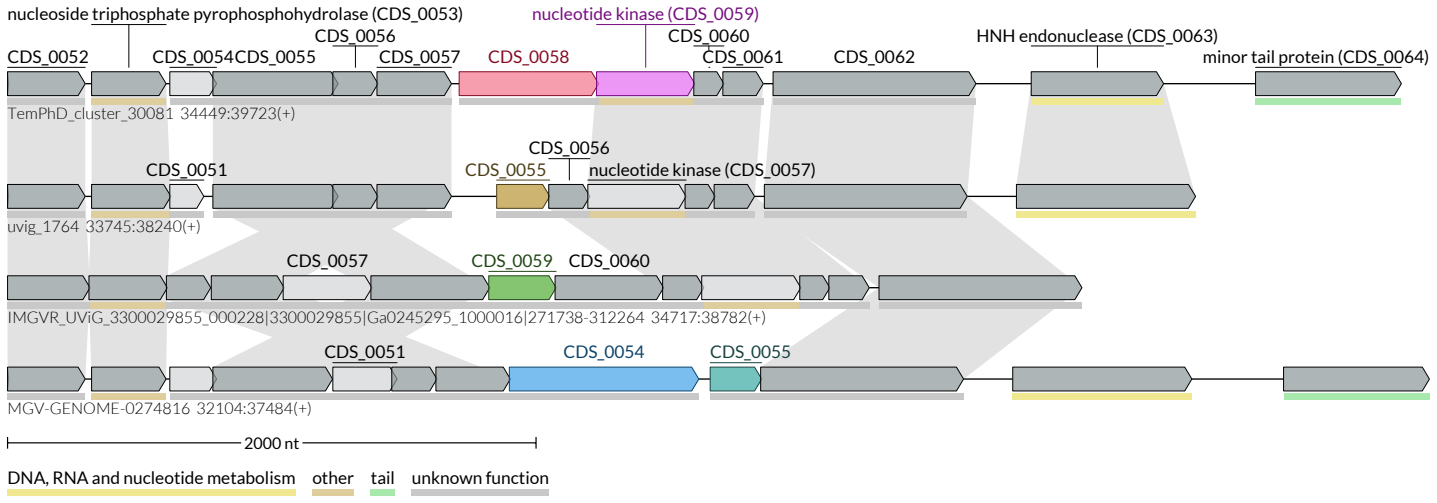
nucleoside triphosphate pyrophosphohydrolase (CDS_0053)
nucleotide kinase (CDS_0059)
CDS_0056
CDS_0060
HNH endonuclease (CDS_0063)
CDS_0052
CDS_0054
CDS_0055
CDS_0057
CDS_0058
CDS_0061
CDS_0062
minor tail protein (CDS_0064)
TemPhD_cluster_30081 34449:39723(+)
CDS_0056
CDS_0051
CDS_0055
nucleotide kinase (CDS_0057)
uvig_1764 33745:38240(+)
CDS_0057
CDS_0059
CDS_0060
IMGVR_UViG_3300029855_000228|3300029855|Ga0245295_1000016|271738-312264 34717:38782(+)
CDS_0051
CDS_0054
CDS_0055
MGV-GENOME-0274816 32104:37484(+)
2000 nt
DNA, RNA and nucleotide metabolism
other
tail
unknown function