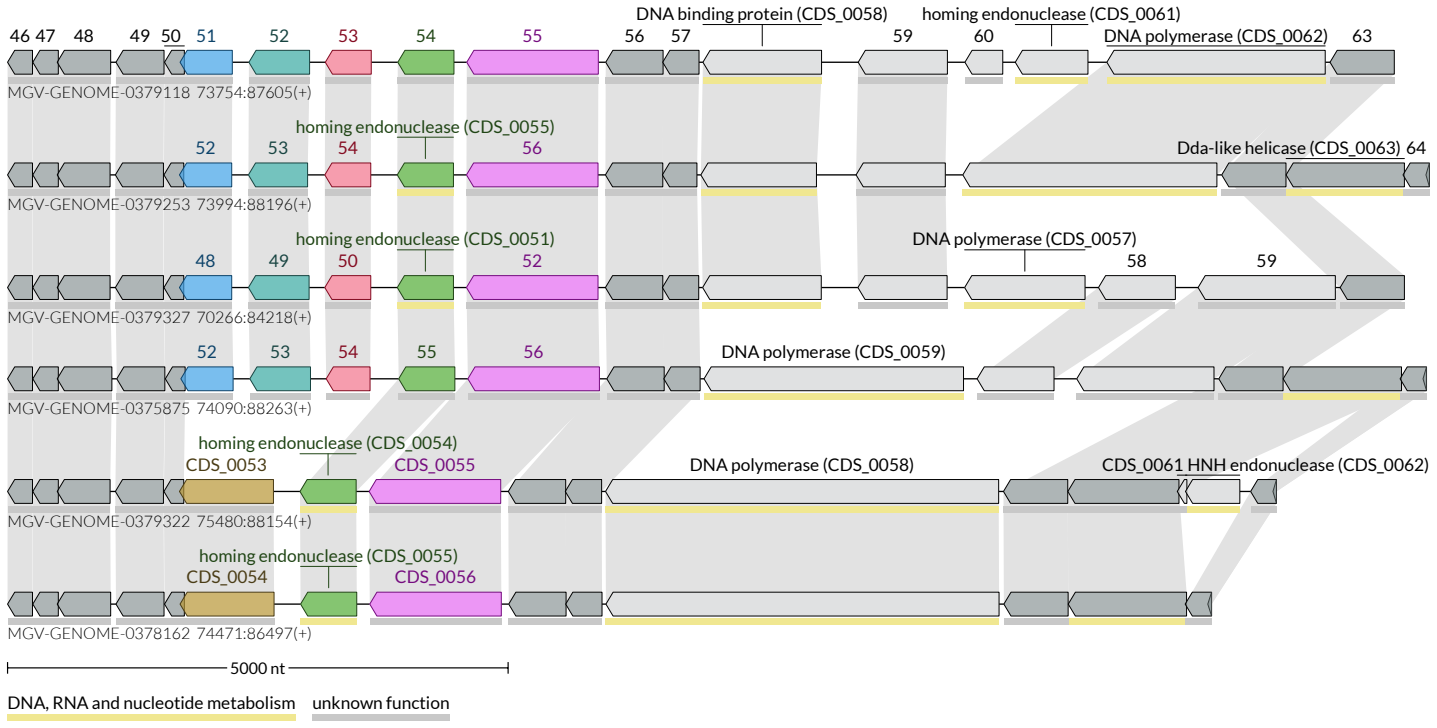
DNA binding protein (CDS_0058)
homing endonuclease (CDS_0061)
46 47 48 49 50 51 52 53 54 55 56 57 59 60 DNA polymerase (CDS_0062) 63
MGV-GENOME-0379118 73754:87605(+)
homing endonuclease (CDS_0055)
52 53 54 56
Dda-like helicase (CDS_0063) 64
MGV-GENOME-0379253 73994:88196(+)
homing endonuclease (CDS_0051)
DNA polymerase (CDS_0057)
48 49 50 52 58 59
MGV-GENOME-0379327 70266:84218(+)
52 53 54 55 56
DNA polymerase (CDS_0059)
MGV-GENOME-0375875 74090:88263(+)
homing endonuclease (CDS_0054)
CDS_0053
CDS_0055
DNA polymerase (CDS_0058)
CDS_0061 HNH endonuclease (CDS_0062)
MGV-GENOME-0379322 75480:88154(+)
homing endonuclease (CDS_0055)
CDS_0054
CDS_0056
MGV-GENOME-0378162 74471:86497(+)
5000 nt
DNA, RNA and nucleotide metabolism
unknown function