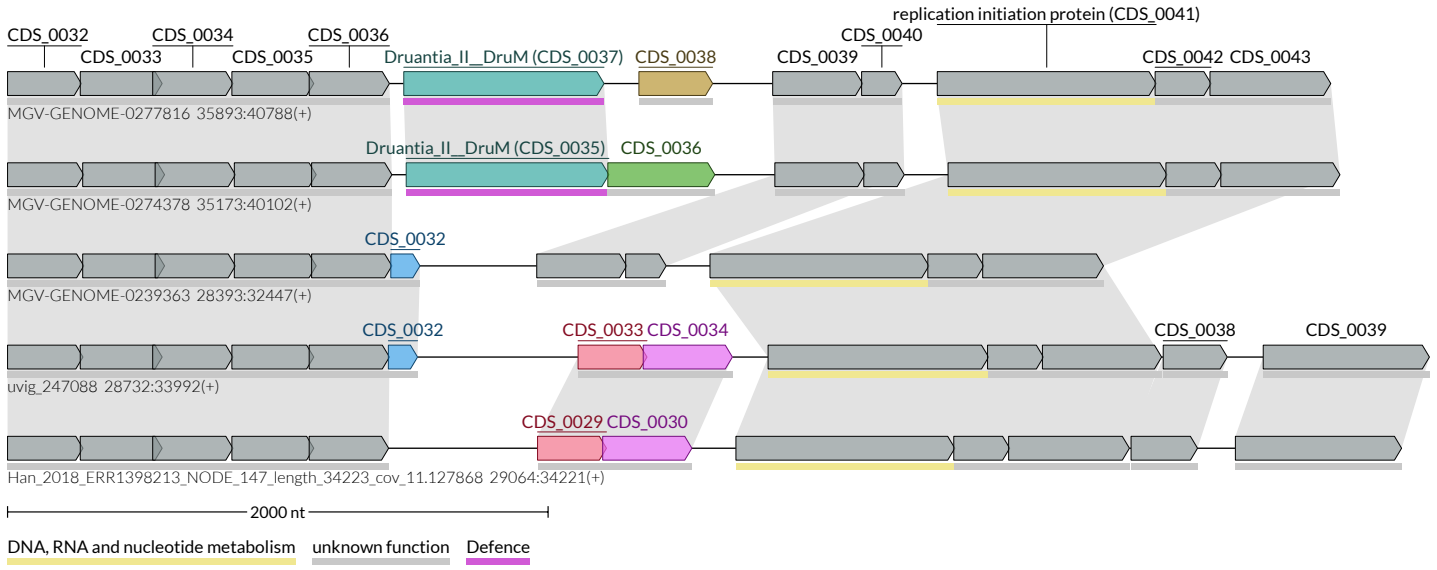
CDS_0032
CDS_0033
CDS_0034
CDS_0035
CDS_0036
Druantia_II__DruM (CDS_0037)
CDS_0038
CDS_0039
CDS_0040
replication initiation protein (CDS_0041)
CDS_0042
CDS_0043
MGV-GENOME-0277816 35893:40788(+)
Druantia_II__DruM (CDS_0035)
CDS_0036
MGV-GENOME-0274378 35173:40102(+)
CDS_0032
MGV-GENOME-0239363 28393:32447(+)
CDS_0032
CDS_0033
CDS_0034
CDS_0038
CDS_0039
uvig_247088 28732:33992(+)
CDS_0029
CDS_0030
Han_2018_ERR1398213_NODE_147_length_34223_cov_11.127868 29064:34221(+)
2000 nt
DNA, RNA and nucleotide metabolism
unknown function
Defence