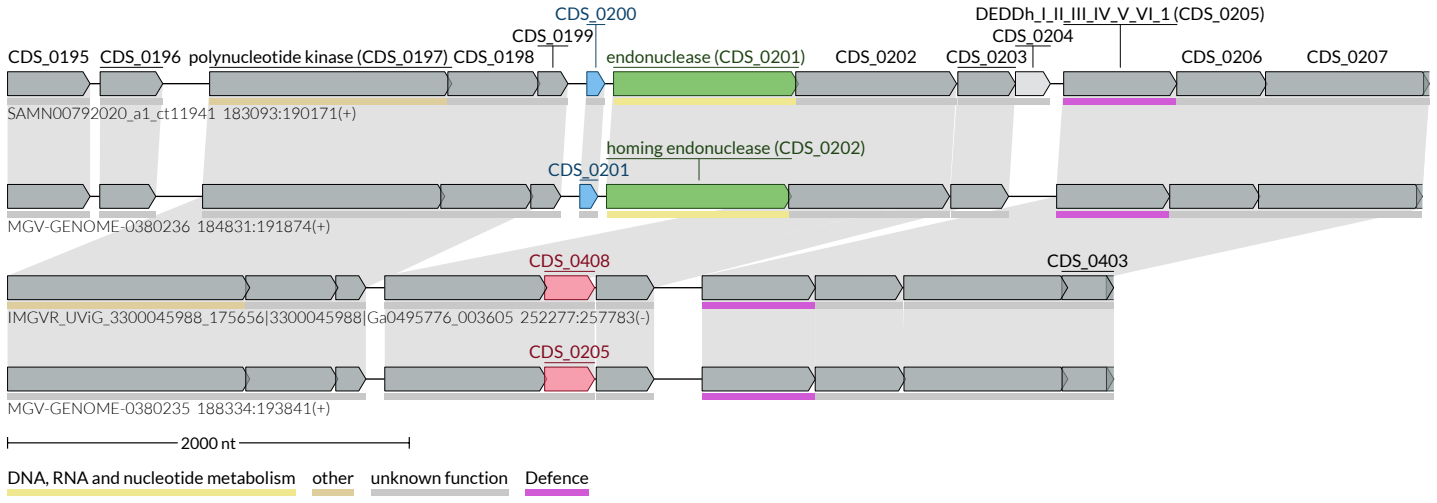
CDS_0200
DEDDh_I_II_III_IV_V_VI_1 (CDS_0205)
CDS_0199
CDS_0204
CDS_0195
CDS_0196
polynucleotide kinase (CDS_0197)
CDS_0198
endonuclease (CDS_0201)
CDS_0202
CDS_0203
CDS_0206
CDS_0207
SAMN00792020_a1_ct11941 183093:190171(+)
homing endonuclease (CDS_0202)
CDS_0201
MGV-GENOME-0380236 184831:191874(+)
CDS_0408
CDS_0403
IMGVR_UViG_3300045988_175656|3300045988|Ga0495776_003605 252277:257783(-)
CDS_0205
MGV-GENOME-0380235 188334:193841(+)
2000 nt
DNA, RNA and nucleotide metabolism
other
unknown function
Defence