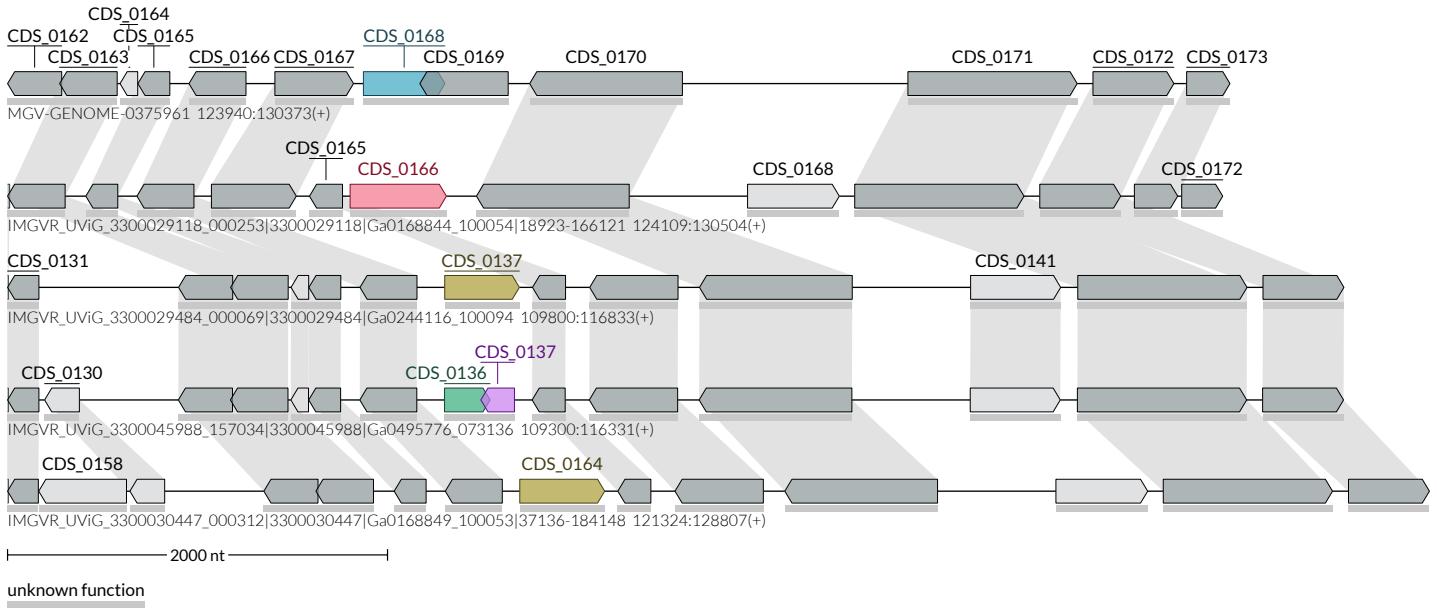
CDS_0164
CDS_0162
CDS_0165
CDS_0163
CDS_0166
CDS_0167
CDS_0168
CDS_0169
CDS_0170
CDS_0171
CDS_0172
CDS_0173
MGV-GENOME-0375961 123940:130373(+)
CDS_0165
CDS_0166
CDS_0168
CDS_0172
IMGVR_UViG_3300029118_000253|3300029118|Ga0168844_100054|18923-166121 124109:130504(+)
CDS_0131
CDS_0137
CDS_0141
IMGVR_UViG_3300029484_000069|3300029484|Ga0244116_100094 109800:116833(+)
CDS_0137
CDS_0130
CDS_0136
IMGVR_UViG_3300045988_157034|3300045988|Ga0495776_073136 109300:116331(+)
CDS_0158
CDS_0164
IMGVR_UViG_3300030447_000312|3300030447|Ga0168849_100053|37136-184148 121324:128807(+)
2000 nt
unknown function