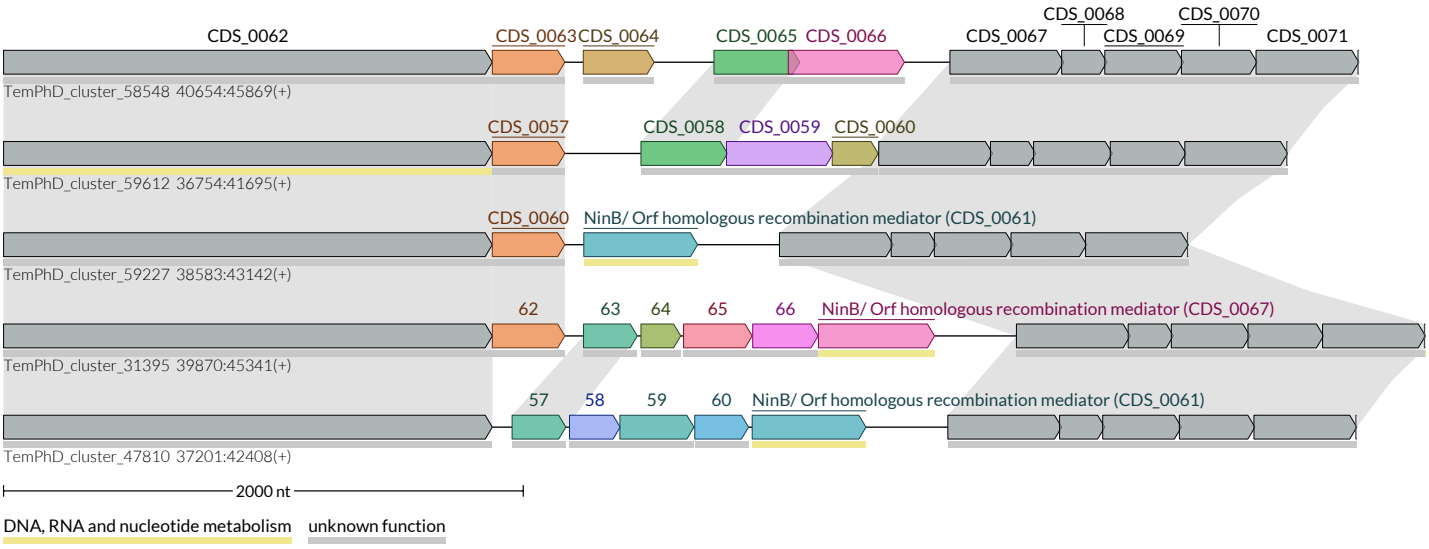
CDS_0062
CDS_0063
CDS_0064
CDS_0065
CDS_0066
CDS_0067
CDS_0068
CDS_0069
CDS_0070
CDS_0071
TemPhD_cluster_58548 40654:45869(+)
CDS_0057
CDS_0058
CDS_0059
CDS_0060
TemPhD_cluster_59612 36754:41695(+)
CDS_0060
NinB/ Orf homologous recombination mediator (CDS_0061)
TemPhD_cluster_59227 38583:43142(+)
62
63
64
65
66
NinB/ Orf homologous recombination mediator (CDS_0067)
TemPhD_cluster_31395 39870:45341(+)
57
58
59
60
NinB/ Orf homologous recombination mediator (CDS_0061)
TemPhD_cluster_47810 37201:42408(+)
2000 nt
DNA, RNA and nucleotide metabolism
unknown function