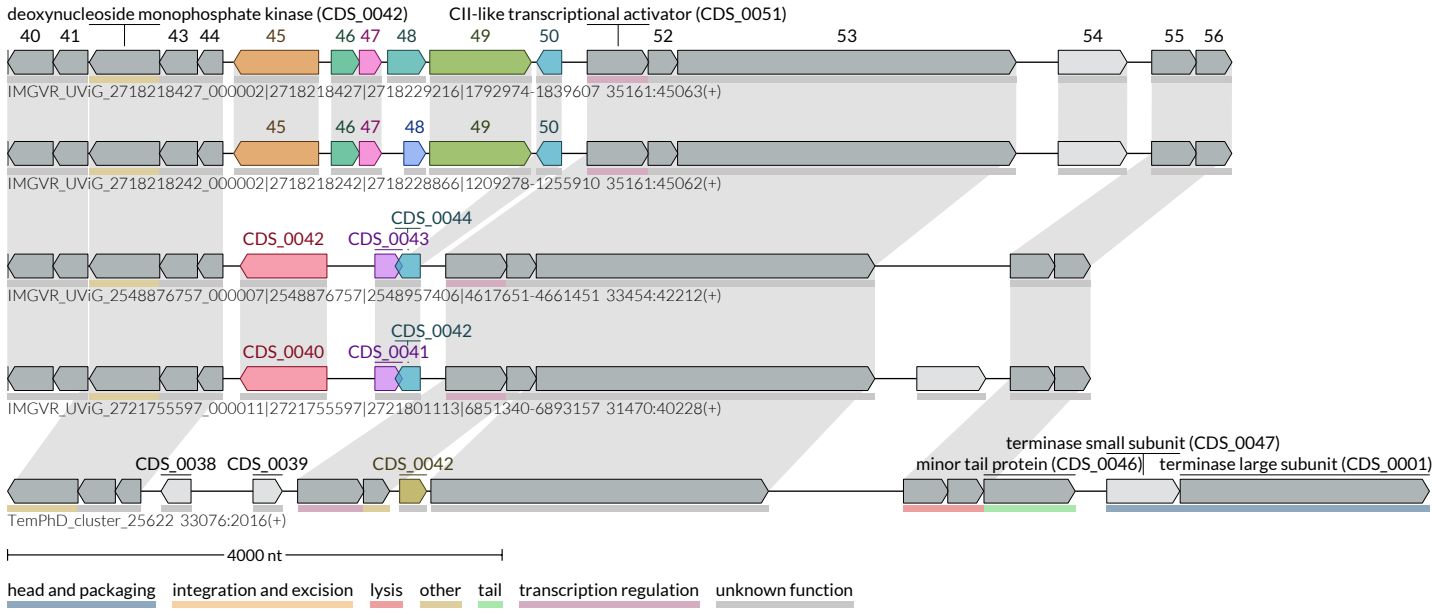
deoxynucleoside monophosphate kinase (CDS_0042)
CII-like transcriptional activator (CDS_0051)
40 41 43 44 45 46 47 48 49 50 52 53 54 55 56
IMGVR_UViG_2718218427_000002|2718218427|2718229216|1792974-1839607 35161:45063(+)
45 46 47 48 49 50
IMGVR_UViG_2718218242_000002|2718218242|2718228866|1209278-1255910 35161:45062(+)
CDS_0044
CDS_0042
CDS_0043
IMGVR_UViG_2548876757_000007|2548876757|2548957406|4617651-4661451 33454:42212(+)
CDS_0042
CDS_0040
CDS_0041
IMGVR_UViG_2721755597_000011|2721755597|2721801113|6851340-6893157 31470:40228(+)
terminase small subunit (CDS_0047)
CDS_0038 CDS_0039 CDS_0042
minor tail protein (CDS_0046)
terminase large subunit (CDS_0001)
TemPhD_cluster_25622 33076:2016(+)
4000 nt
head and packaging
integration and excision
lysis
other
tail
transcription regulation
unknown function