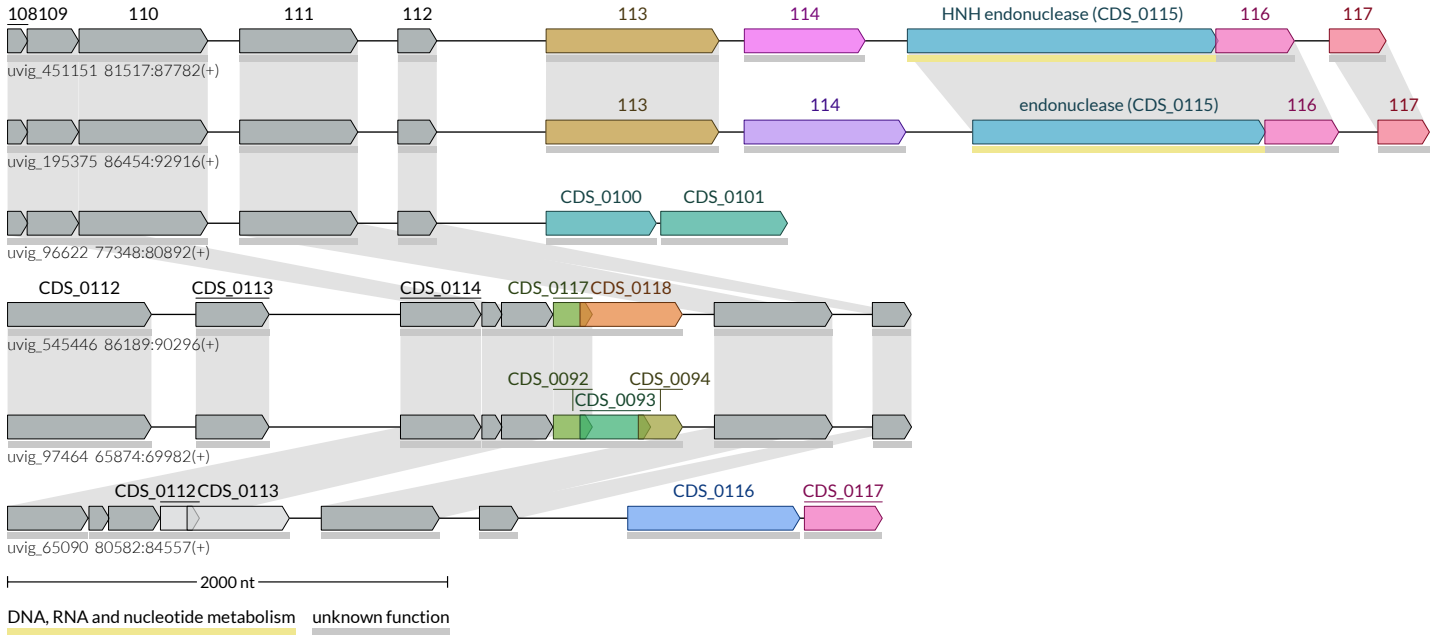
108109
110
111
112
113
114
HNH endonuclease (CDS_0115)
116
117
uvig_451151 81517:87782(+)
113
114
endonuclease (CDS_0115)
116
117
uvig_195375 86454:92916(+)
CDS_0100
CDS_0101
uvig_96622 77348:80892(+)
CDS_0112
CDS_0113
CDS_0114
CDS_0117
CDS_0118
uvig_545446 86189:90296(+)
CDS_0092
CDS_0094
CDS_0093
uvig_97464 65874:69982(+)
CDS_0112
CDS_0113
CDS_0116
CDS_0117
uvig_65090 80582:84557(+)
2000 nt
DNA, RNA and nucleotide metabolism
unknown function