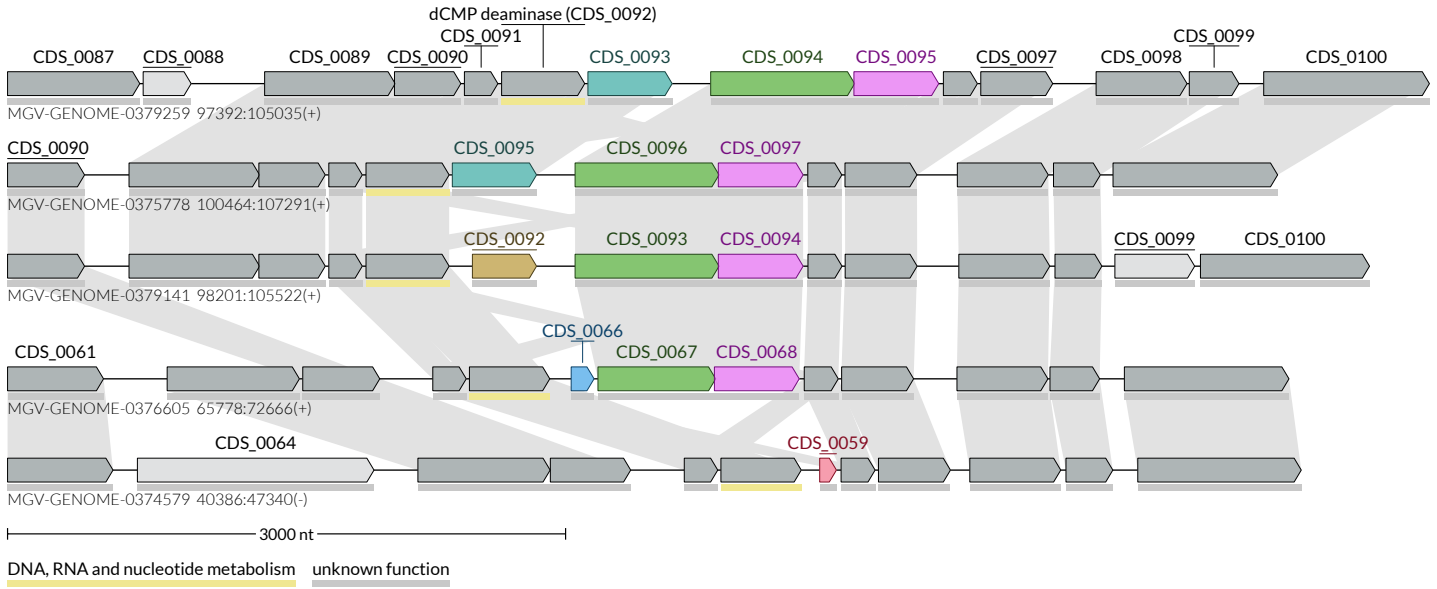
dCMP deaminase (CDS_0092)
CDS_0091
CDS_0087
CDS_0088
CDS_0089
CDS_0090
CDS_0093
CDS_0094
CDS_0095
CDS_0097
CDS_0098
CDS_0099
CDS_0100
MGV-GENOME-0379259 97392:105035(+)
CDS_0090
CDS_0095
CDS_0096
CDS_0097
MGV-GENOME-0375778 100464:107291(+)
CDS_0092
CDS_0093
CDS_0094
CDS_0099
CDS_0100
MGV-GENOME-0379141 98201:105522(+)
CDS_0066
CDS_0061
CDS_0067
CDS_0068
MGV-GENOME-0376605 65778:72666(+)
CDS_0064
CDS_0059
MGV-GENOME-0374579 40386:47340(-)
3000 nt
DNA, RNA and nucleotide metabolism
unknown function