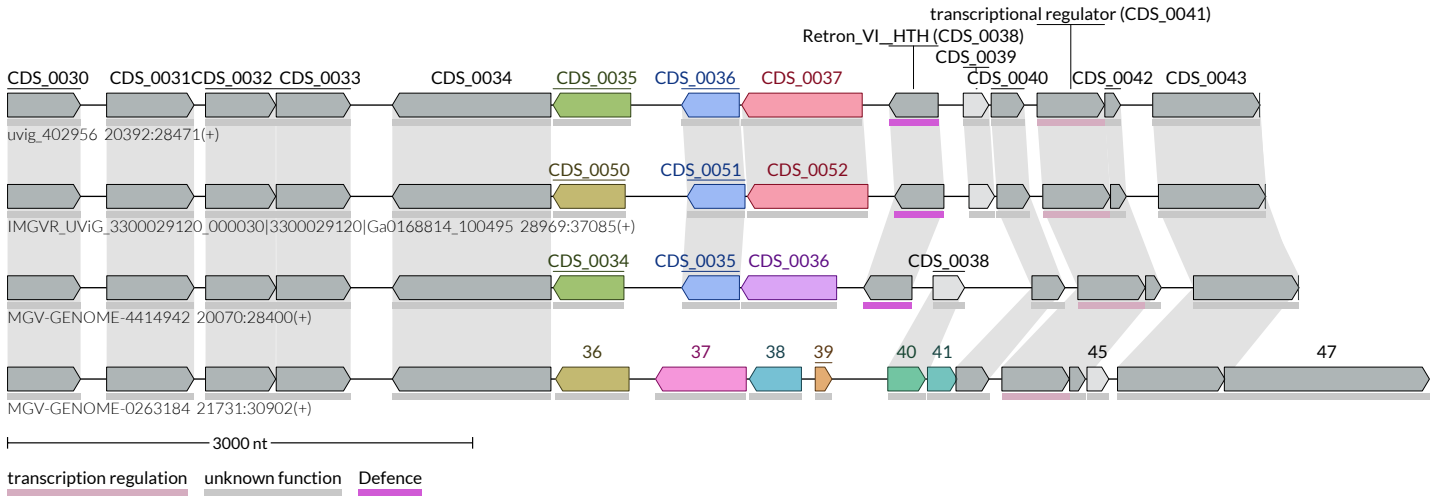
transcriptional regulator (CDS_0041)
Retron_VI__HTH (CDS_0038)
CDS_0039
CDS_0030
CDS_0031
CDS_0032
CDS_0033
CDS_0034
CDS_0035
CDS_0036
CDS_0037
CDS_0040
CDS_0042
CDS_0043
uvig_402956 20392:28471(+)
CDS_0050
CDS_0051
CDS_0052
IMGVR_UViG_3300029120_000030|3300029120|Ga0168814_100495 28969:37085(+)
CDS_0034
CDS_0035
CDS_0036
CDS_0038
MGV-GENOME-4414942 20070:28400(+)
36
37
38
39
40
41
45
47
MGV-GENOME-0263184 21731:30902(+)
3000 nt
transcription regulation
unknown function
Defence