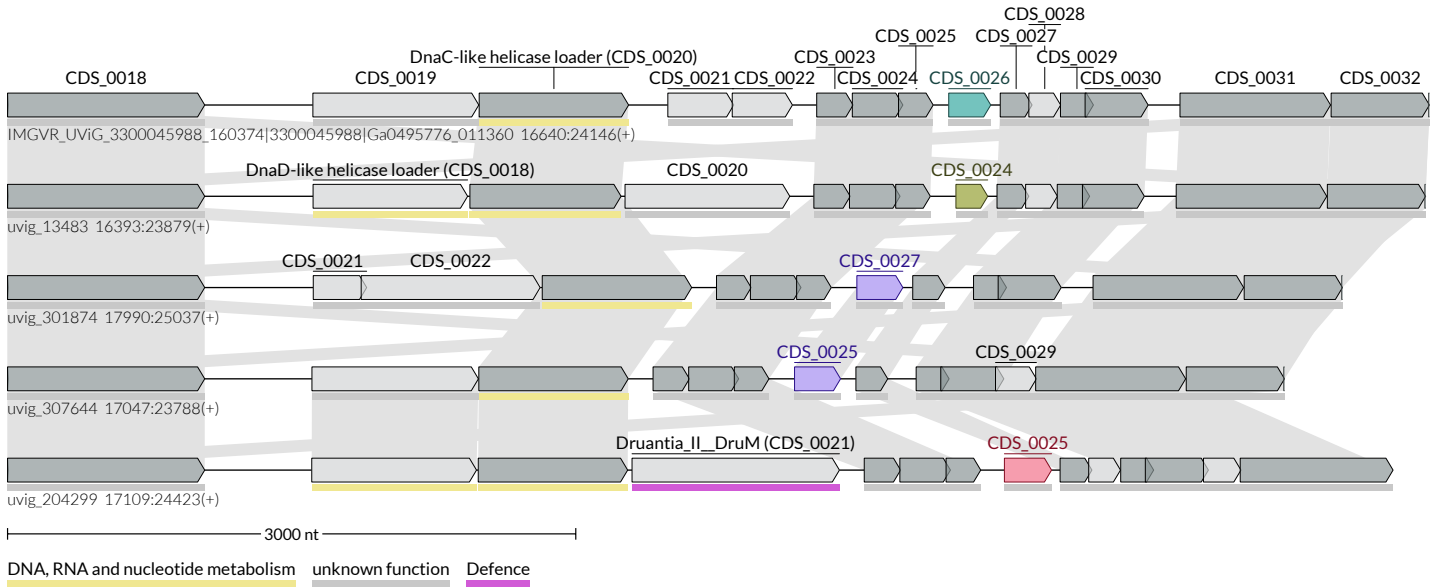
CDS_0028
CDS_0025
CDS_0027
DnaC-like helicase loader (CDS_0020)
CDS_0023
CDS_0029
CDS_0018
CDS_0019
CDS_0021
CDS_0022
CDS_0024
CDS_0026
CDS_0030
CDS_0031
CDS_0032
IMGVR_UViG_3300045988_160374|3300045988|Ga0495776_011360 16640:24146(+)
DnaD-like helicase loader (CDS_0018)
CDS_0020
CDS_0024
uvig_13483 16393:23879(+)
CDS_0021
CDS_0022
CDS_0027
uvig_301874 17990:25037(+)
CDS_0025
CDS_0029
uvig_307644 17047:23788(+)
Druantia_II__DruM (CDS_0021)
CDS_0025
uvig_204299 17109:24423(+)
3000 nt
DNA, RNA and nucleotide metabolism
unknown function
Defence