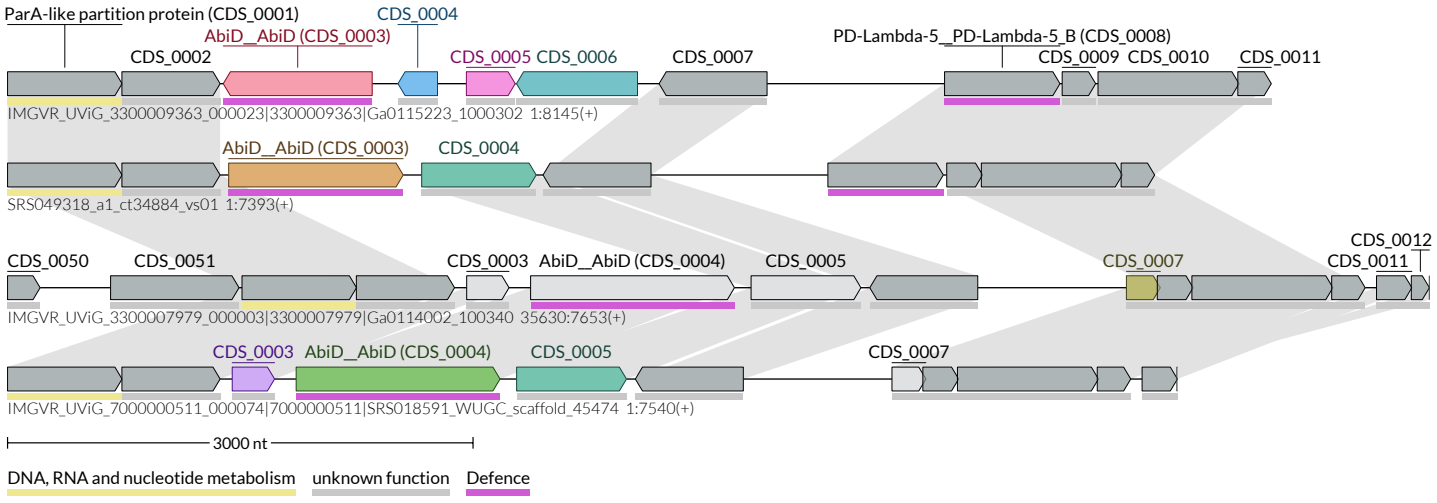
ParA-like partition protein (CDS_0001)
CDS_0004
AbiD__AbiD (CDS_0003)
PD-Lambda-5__PD-Lambda-5_B (CDS_0008)
CDS_0002
CDS_0005
CDS_0006
CDS_0007
CDS_0009
CDS_0010
CDS_0011
IMGVR_UViG_3300009363_000023|3300009363|Ga0115223_1000302 1:8145(+)
AbiD__AbiD (CDS_0003)
CDS_0004
SRS049318_a1_ct34884_vs01 1:7393(+)
CDS_0012
CDS_0050
CDS_0051
CDS_0003
AbiD__AbiD (CDS_0004)
CDS_0005
CDS_0007
CDS_0011
IMGVR_UViG_3300007979_000003|3300007979|Ga0114002_100340 35630:7653(+)
CDS_0003
AbiD__AbiD (CDS_0004)
CDS_0005
CDS_0007
IMGVR_UViG_7000000511_000074|7000000511|SRS018591_WUGC_scaffold_45474 1:7540(+)
3000 nt
DNA, RNA and nucleotide metabolism
unknown function
Defence