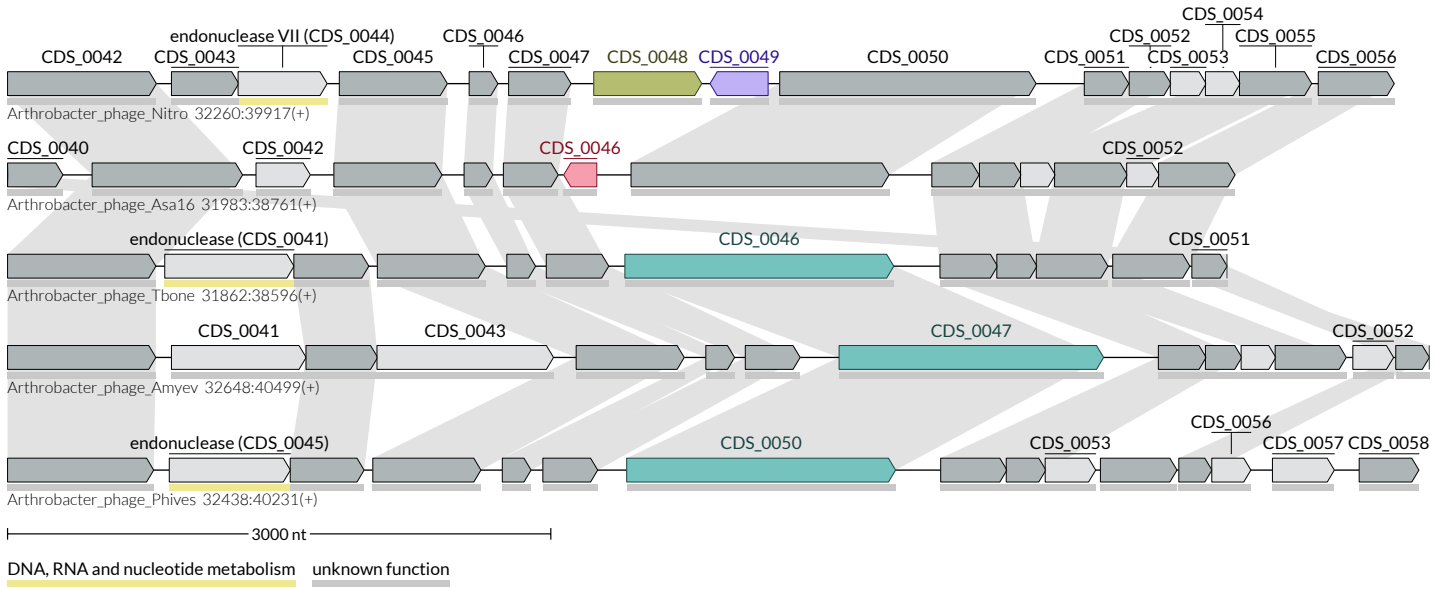
CDS_0042
CDS_0043
endonuclease VII (CDS_0044)
CDS_0045
CDS_0046
CDS_0047
CDS_0048
CDS_0049
CDS_0050
CDS_0051
CDS_0052
CDS_0053
CDS_0054
CDS_0055
CDS_0056
Arthrobacter_phage_Nitro 32260:39917(+)
CDS_0040
CDS_0042
CDS_0046
CDS_0052
Arthrobacter_phage_Asa16 31983:38761(+)
endonuclease (CDS_0041)
CDS_0046
CDS_0051
Arthrobacter_phage_Tbone 31862:38596(+)
CDS_0041
CDS_0043
CDS_0047
CDS_0052
Arthrobacter_phage_Amyev 32648:40499(+)
endonuclease (CDS_0045)
CDS_0050
CDS_0053
CDS_0056
CDS_0057
CDS_0058
Arthrobacter_phage_Phives 32438:40231(+)
3000 nt
DNA, RNA and nucleotide metabolism
unknown function