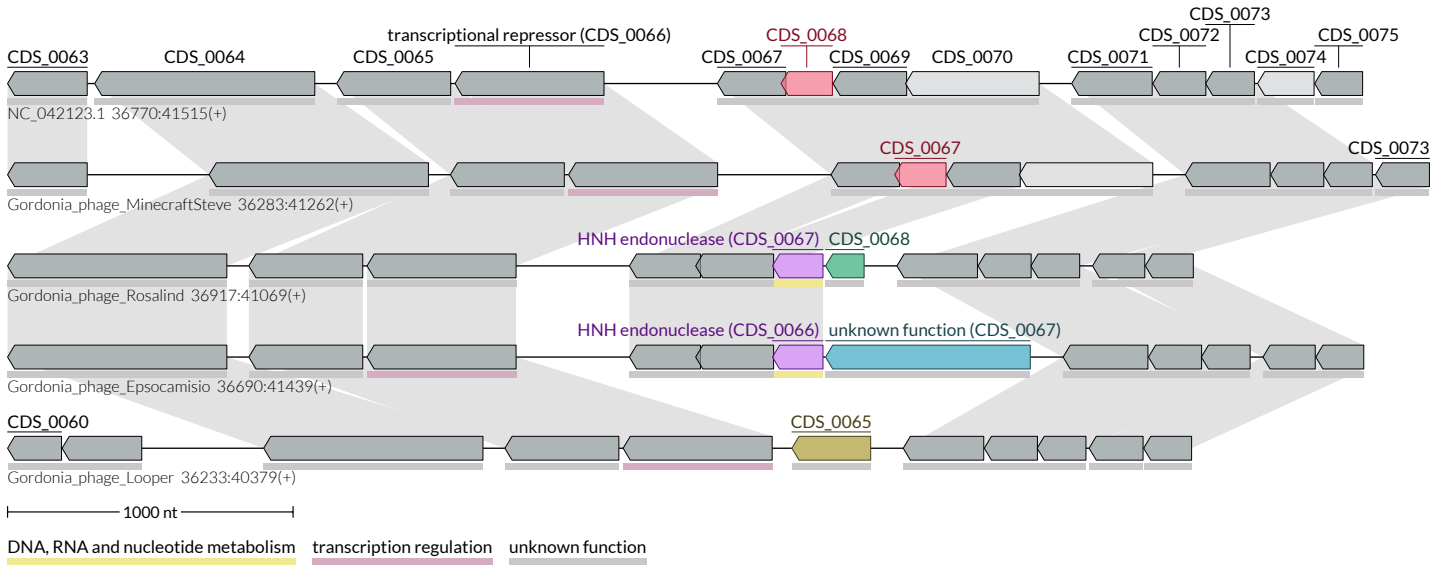
CDS_0063
CDS_0064
CDS_0065
transcriptional repressor (CDS_0066)
CDS_0067
CDS_0068
CDS_0069
CDS_0070
CDS_0071
CDS_0072
CDS_0073
CDS_0074
CDS_0075
NC_042123.1 36770:41515(+)
CDS_0067
CDS_0073
Gordonia_phage_MinecraftSteve 36283:41262(+)
HNH endonuclease (CDS_0067)
CDS_0068
Gordonia_phage_Rosalind 36917:41069(+)
HNH endonuclease (CDS_0066)
unknown function (CDS_0067)
Gordonia_phage_Epsocamisio 36690:41439(+)
CDS_0060
CDS_0065
Gordonia_phage_Looper 36233:40379(+)
1000 nt
DNA, RNA and nucleotide metabolism
transcription regulation
unknown function