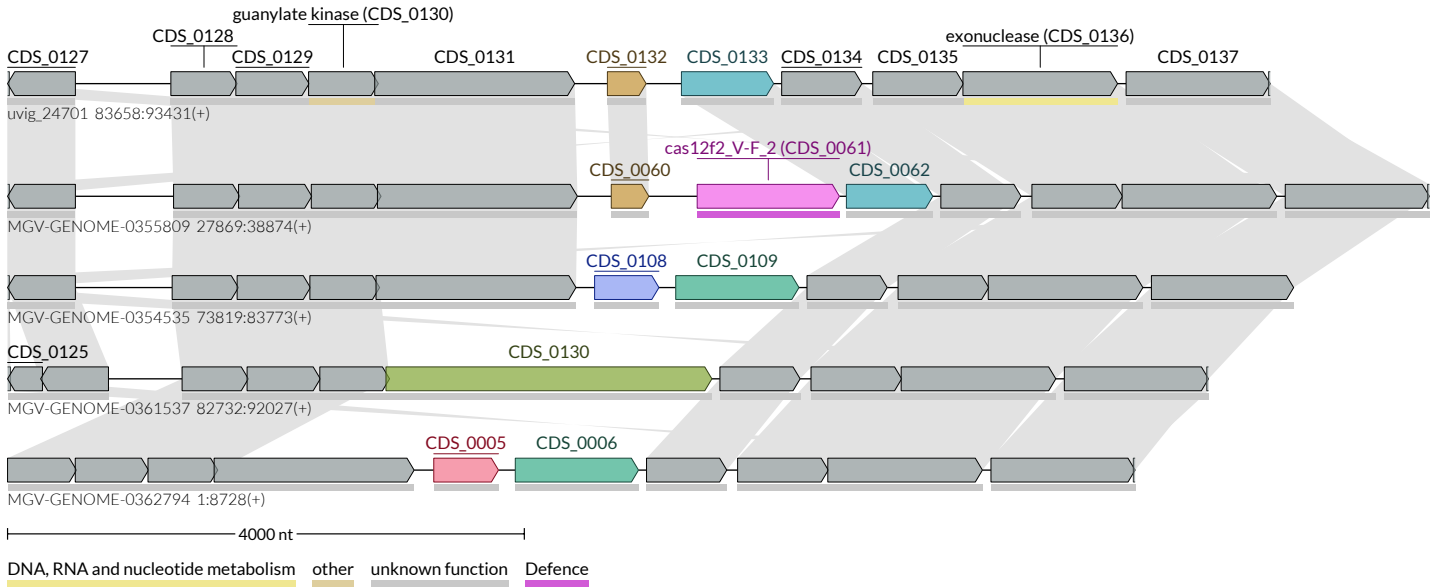
guanylate kinase (CDS_0130)
CDS_0128
exonuclease (CDS_0136)
CDS_0127
CDS_0129
CDS_0131
CDS_0132
CDS_0133
CDS_0134
CDS_0135
CDS_0137
uvig_24701 83658:93431(+)
cas12f2_V-F_2 (CDS_0061)
CDS_0060
CDS_0062
MGV-GENOME-0355809 27869:38874(+)
CDS_0108
CDS_0109
MGV-GENOME-0354535 73819:83773(+)
CDS_0125
CDS_0130
MGV-GENOME-0361537 82732:92027(+)
CDS_0005
CDS_0006
MGV-GENOME-0362794 1:8728(+)
4000 nt
DNA, RNA and nucleotide metabolism
other
unknown function
Defence