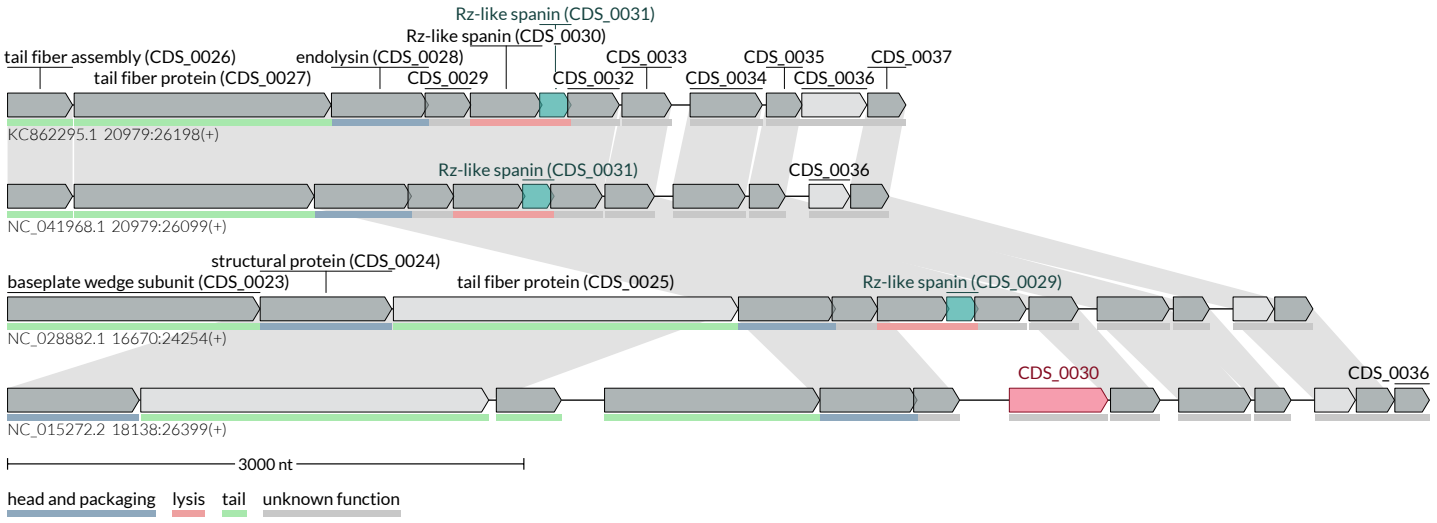
Rz-like spanin (CDS_0031)
Rz-like spanin (CDS_0030)
tail fiber assembly (CDS_0026)
endolysin (CDS_0028)
CDS_0033
CDS_0035
CDS_0037
tail fiber protein (CDS_0027)
CDS_0029
CDS_0032
CDS_0034
CDS_0036
KC862295.1 20979:26198(+)
Rz-like spanin (CDS_0031)
CDS_0036
NC_041968.1 20979:26099(+)
structural protein (CDS_0024)
baseplate wedge subunit (CDS_0023)
tail fiber protein (CDS_0025)
Rz-like spanin (CDS_0029)
NC_028882.1 16670:24254(+)
CDS_0030
CDS_0036
NC_015272.2 18138:26399(+)
3000 nt
head and packaging
lysis
tail
unknown function