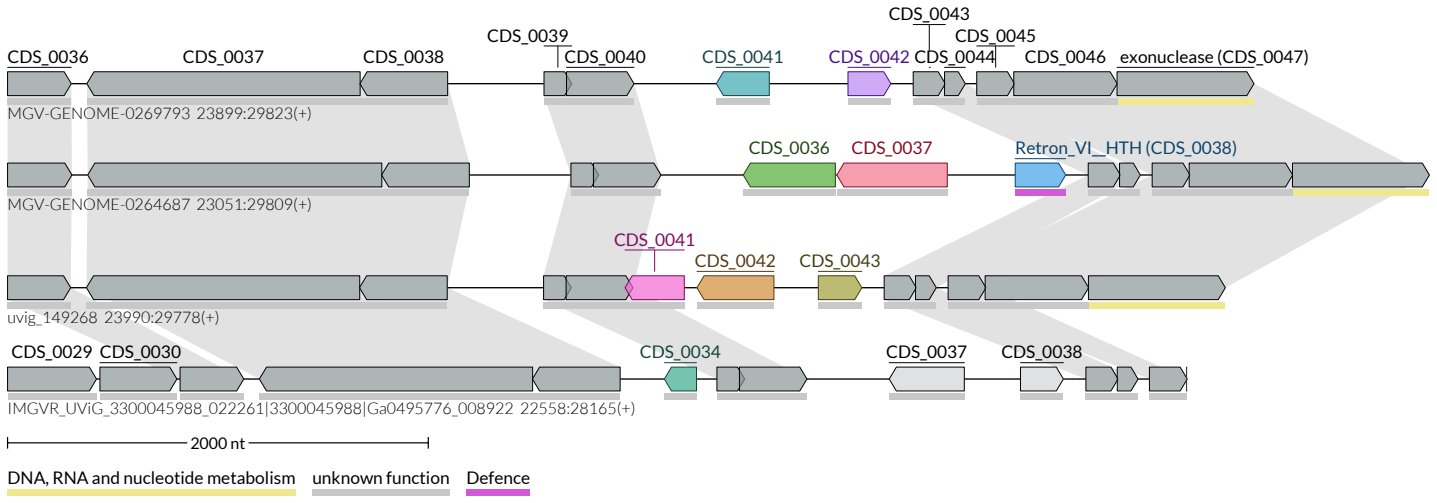
CDS_0043
CDS_0039
CDS_0045
CDS_0036
CDS_0037
CDS_0038
CDS_0040
CDS_0041
CDS_0042
CDS_0044
CDS_0046
exonuclease (CDS_0047)
MGV-GENOME-0269793 23899:29823(+)
CDS_0036
CDS_0037
Retron_VI_HTH (CDS_0038)
MGV-GENOME-0264687 23051:29809(+)
CDS_0041
CDS_0042
CDS_0043
uvig_149268 23990:29778(+)
CDS_0029
CDS_0030
CDS_0034
CDS_0037
CDS_0038
IMGVR_UViG_3300045988_022261|3300045988|Ga0495776_008922 22558:28165(+)
2000 nt
DNA, RNA and nucleotide metabolism
unknown function
Defence