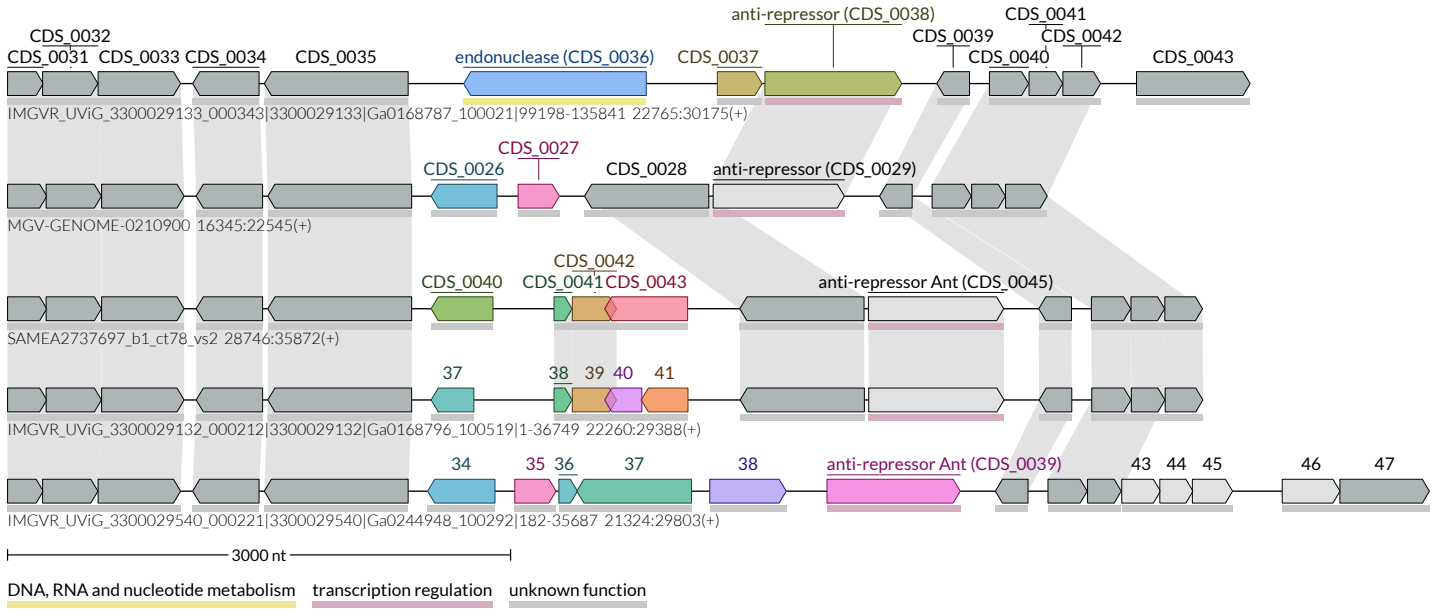
CDS_0032
CDS_0031
CDS_0033
CDS_0034
CDS_0035
endonuclease (CDS_0036)
CDS_0037
anti-repressor (CDS_0038)
CDS_0039
CDS_0041
CDS_0042
CDS_0040
CDS_0043
IMGVR_UViG_3300029133_000343|3300029133|Ga0168787_100021|99198-135841 22765:30175(+)
CDS_0027
CDS_0026
CDS_0028
anti-repressor (CDS_0029)
MGV-GENOME-0210900 16345:22545(+)
CDS_0042
CDS_0040
CDS_0041
CDS_0043
anti-repressor Ant (CDS_0045)
SAMEA2737697_b1_ct78_vs2 28746:35872(+)
37
38
39
40
41
IMGVR_UViG_3300029132_000212|3300029132|Ga0168796_100519|1-36749 22260:29388(+)
34
35
36
37
38
anti-repressor Ant (CDS_0039)
43
44
45
46
47
IMGVR_UViG_3300029540_000221|3300029540|Ga0244948_100292|182-35687 21324:29803(+)
3000 nt
DNA, RNA and nucleotide metabolism
transcription regulation
unknown function