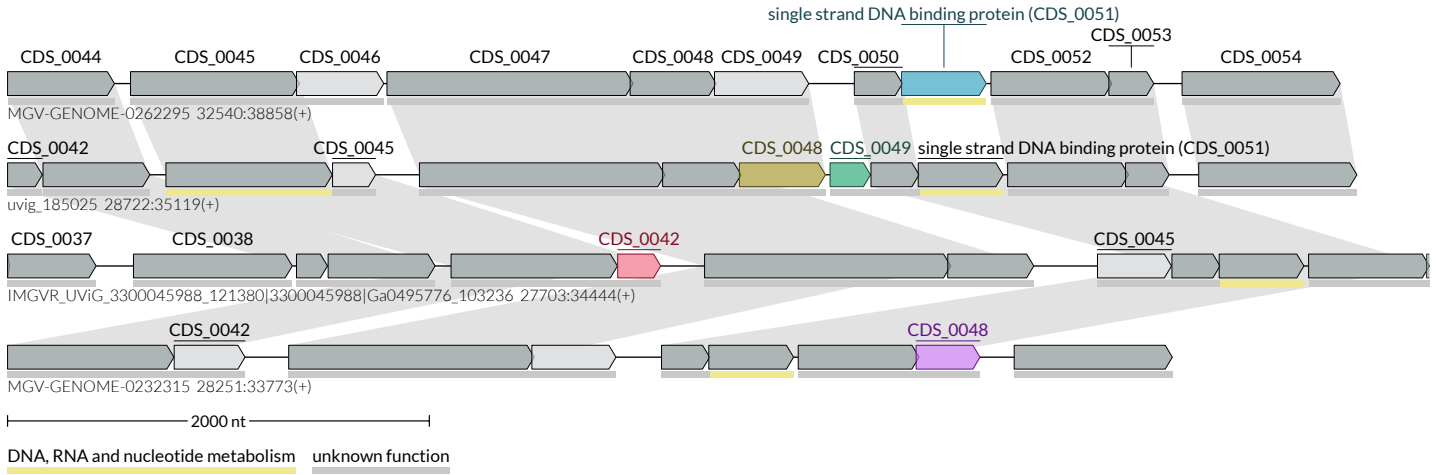
single strand DNA binding protein (CDS_0051)
CDS_0053
CDS_0044
CDS_0045
CDS_0046
CDS_0047
CDS_0048
CDS_0049
CDS_0050
CDS_0052
CDS_0054
MGV-GENOME-0262295 32540:38858(+)
CDS_0042
CDS_0045
CDS_0048
CDS_0049
single strand DNA binding protein (CDS_0051)
uvig_185025 28722:35119(+)
CDS_0037
CDS_0038
CDS_0042
CDS_0045
IMGVR_UViG_3300045988_121380|3300045988|Ga0495776_103236 27703:34444(+)
CDS_0042
CDS_0048
MGV-GENOME-0232315 28251:33773(+)
2000 nt
DNA, RNA and nucleotide metabolism
unknown function