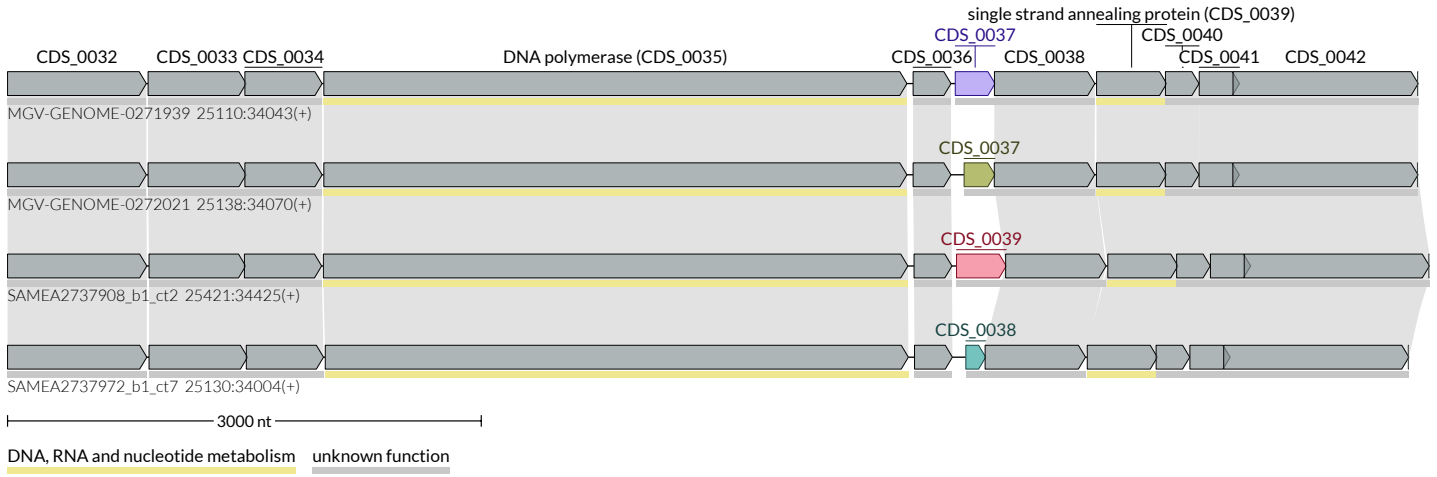
single strand annealing protein (CDS_0039)
CDS_0032
CDS_0033
CDS_0034
DNA polymerase (CDS_0035)
CDS_0036
CDS_0037
CDS_0038
CDS_0040
CDS_0041
CDS_0042
MGV-GENOME-0271939 25110:34043(+)
CDS_0037
MGV-GENOME-0272021 25138:34070(+)
CDS_0039
SAMEA2737908_b1_ct2 25421:34425(+)
CDS_0038
SAMEA2737972_b1_ct7 25130:34004(+)
3000 nt
DNA, RNA and nucleotide metabolism
unknown function