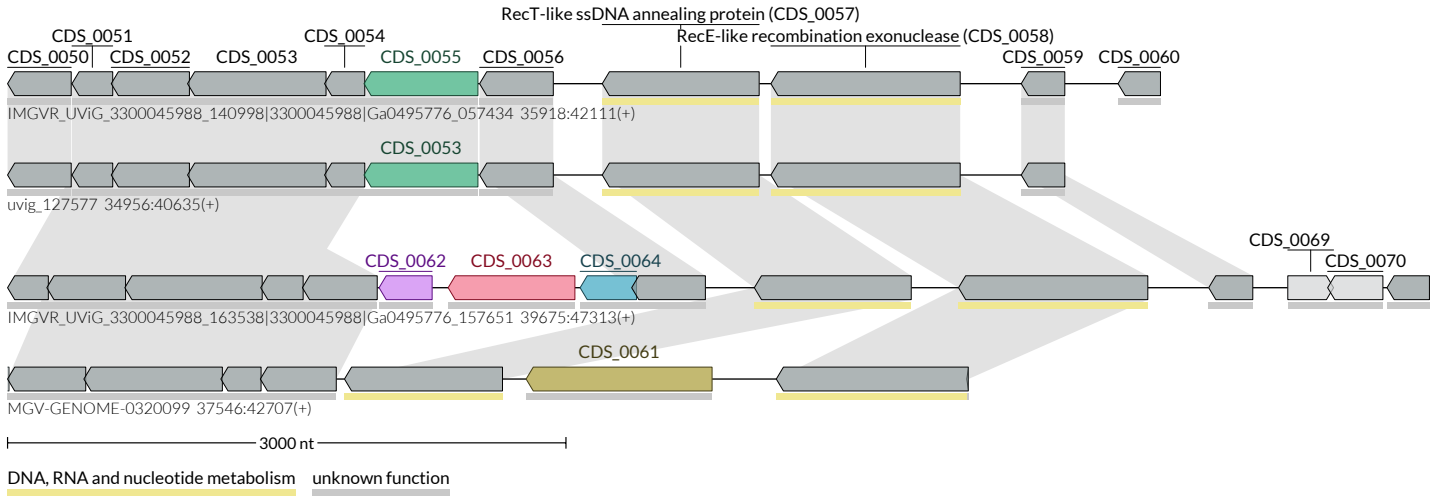
RecT-like ssDNA annealing protein (CDS_0057)
RecE-like recombination exonuclease (CDS_0058)
CDS_0051
CDS_0054
CDS_0050
CDS_0052
CDS_0053
CDS_0055
CDS_0056
CDS_0059
CDS_0060
IMGVR_UViG_3300045988_140998|3300045988|Ga0495776_057434 35918:42111(+)
CDS_0053
uvig_127577 34956:40635(+)
CDS_0069
CDS_0062
CDS_0063
CDS_0064
CDS_0070
IMGVR_UViG_3300045988_163538|3300045988|Ga0495776_157651 39675:47313(+)
CDS_0061
MGV-GENOME-0320099 37546:42707(+)
3000 nt
DNA, RNA and nucleotide metabolism
unknown function