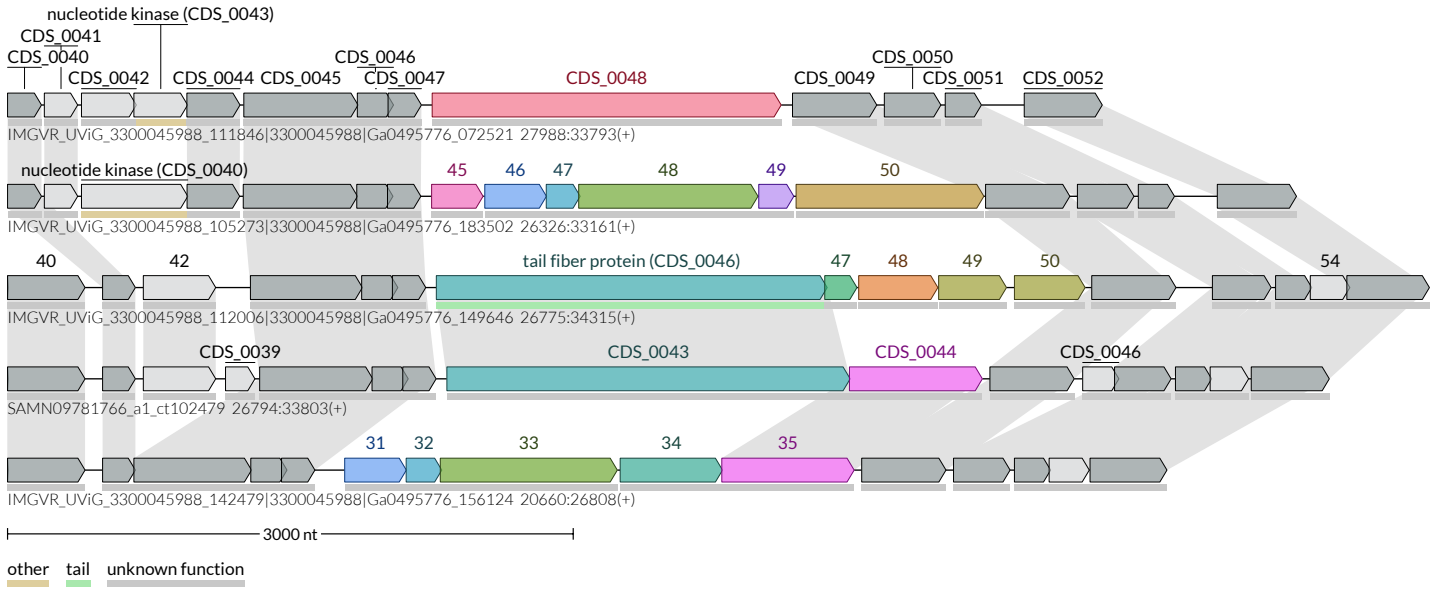
nucleotide kinase (CDS_0043)
CDS_0041
CDS_0040
CDS_0042
CDS_0044
CDS_0045
CDS_0046
CDS_0047
CDS_0048
CDS_0049
CDS_0050
CDS_0051
CDS_0052
IMGVR_UViG_3300045988_111846|3300045988|Ga0495776_072521 27988:33793(+)
nucleotide kinase (CDS_0040)
45
46
47
48
49
50
IMGVR_UViG_3300045988_105273|3300045988|Ga0495776_183502 26326:33161(+)
40
42
tail fiber protein (CDS_0046)
47
48
49
50
54
IMGVR_UViG_3300045988_112006|3300045988|Ga0495776_149646 26775:34315(+)
CDS_0039
CDS_0043
CDS_0044
CDS_0046
SAMN09781766_a1_ct102479 26794:33803(+)
31
32
33
34
35
IMGVR_UViG_3300045988_142479|3300045988|Ga0495776_156124 20660:26808(+)
3000 nt
other
tail
unknown function