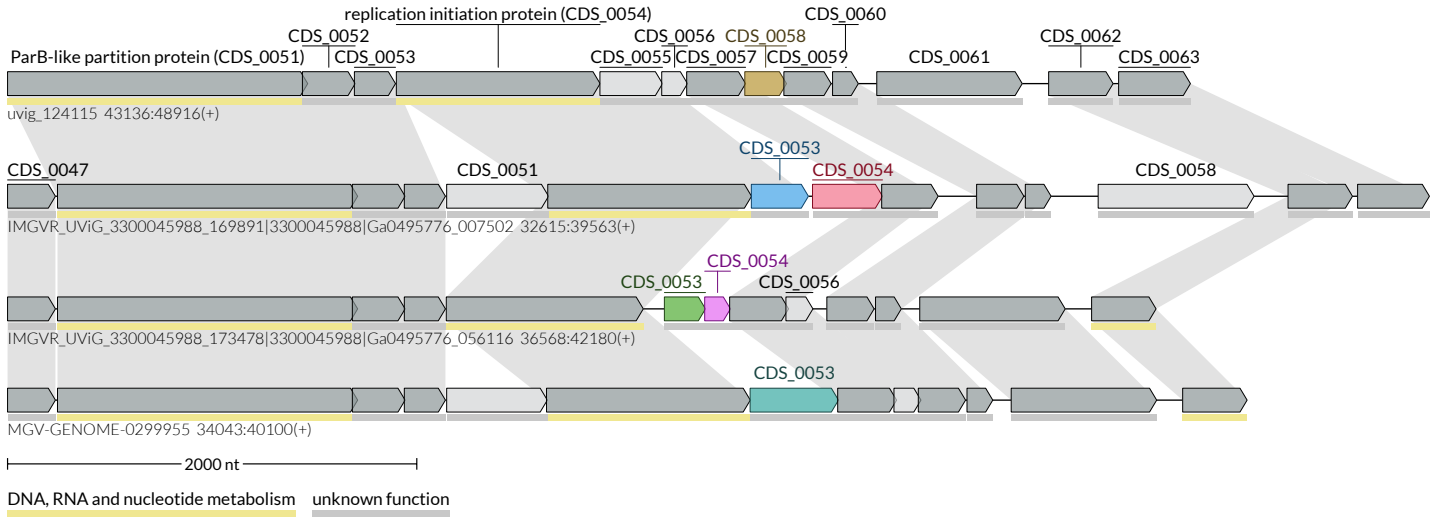
replication initiation protein (CDS_0054)
CDS_0060
CDS_0052
CDS_0056
CDS_0058
CDS_0062
ParB-like partition protein (CDS_0051)
CDS_0053
CDS_0055
CDS_0057
CDS_0059
CDS_0061
CDS_0063
uvig_124115 43136:48916(+)
CDS_0053
CDS_0047
CDS_0051
CDS_0054
CDS_0058
IMGVR_UViG_3300045988_169891|3300045988|Ga0495776_007502 32615:39563(+)
CDS_0054
CDS_0053
CDS_0056
IMGVR_UViG_3300045988_173478|3300045988|Ga0495776_056116 36568:42180(+)
CDS_0053
MGV-GENOME-0299955 34043:40100(+)
2000 nt
DNA, RNA and nucleotide metabolism
unknown function