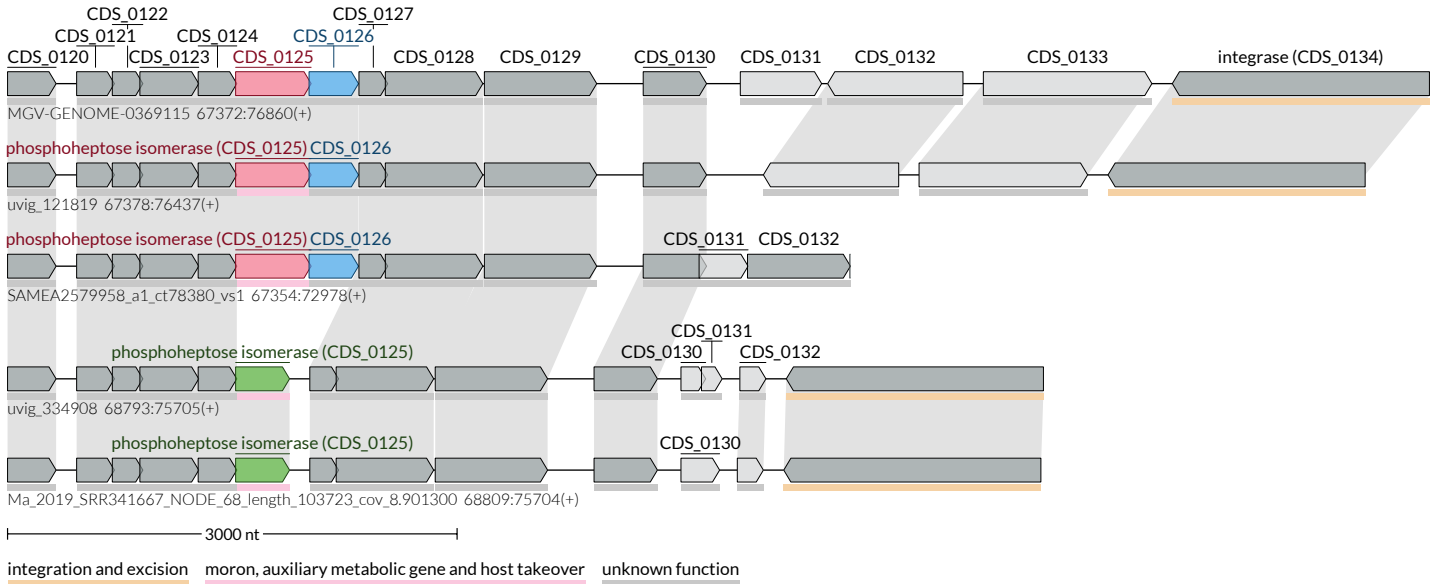
CDS_0122
CDS_0127
CDS_0121
CDS_0124
CDS_0126
CDS_0120
CDS_0123
CDS_0125
CDS_0128
CDS_0129
CDS_0130
CDS_0131
CDS_0132
CDS_0133
integrase (CDS_0134)
MGV-GENOME-0369115 67372:76860(+)
phosphoheptose isomerase (CDS_0125)
CDS_0126
uvig_121819 67378:76437(+)
phosphoheptose isomerase (CDS_0125)
CDS_0126
CDS_0131
CDS_0132
SAMEA2579958_a1_ct78380_vs1 67354:72978(+)
CDS_0131
phosphoheptose isomerase (CDS_0125)
CDS_0130
CDS_0132
uvig_334908 68793:75705(+)
phosphoheptose isomerase (CDS_0125)
CDS_0130
Ma_2019_SRR341667_NODE_68_length_103723_cov_8.901300 68809:75704(+)
3000 nt
integration and excision
moron, auxiliary metabolic gene and host takeover
unknown function