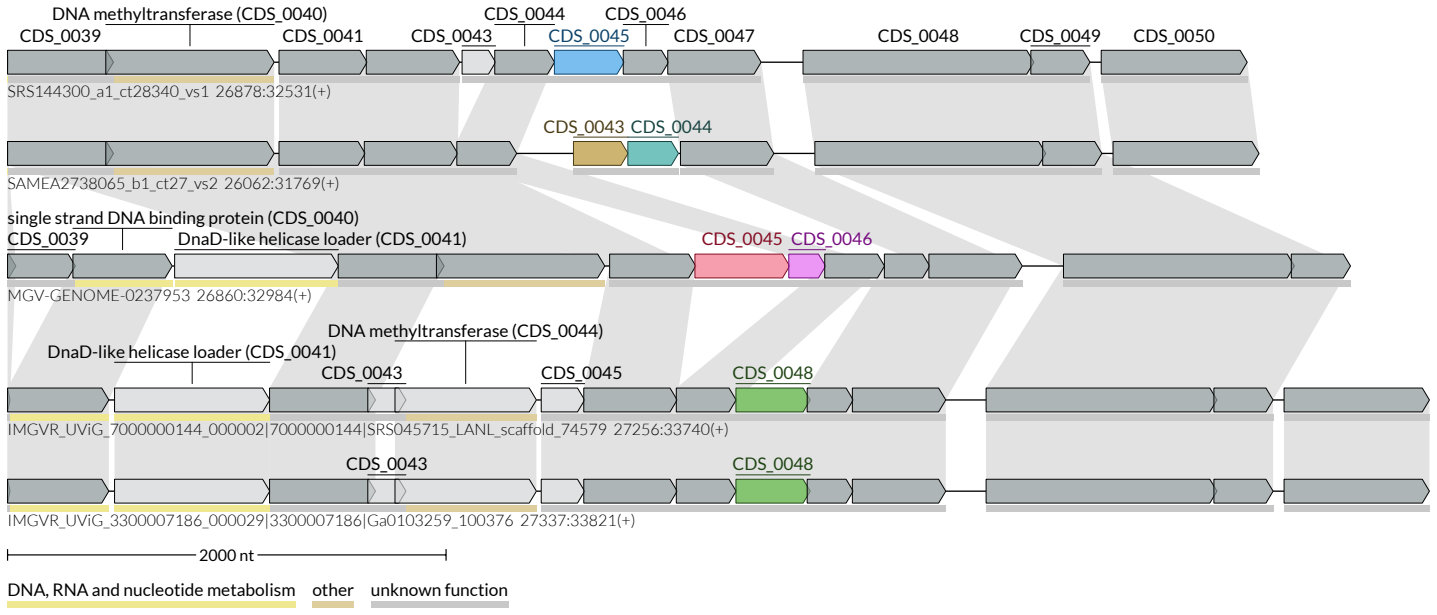
DNA methyltransferase (CDS_0040)
CDS_0039
CDS_0041
CDS_0043
CDS_0044
CDS_0046
CDS_0045
CDS_0047
CDS_0048
CDS_0049
CDS_0050
SRS144300_a1_ct28340_vs1 26878:32531(+)
CDS_0043 CDS_0044
SAMEA2738065_b1_ct27_vs2 26062:31769(+)
single strand DNA binding protein (CDS_0040)
CDS_0039
DnaD-like helicase loader (CDS_0041)
CDS_0045 CDS_0046
MGV-GENOME-0237953 26860:32984(+)
DNA methyltransferase (CDS_0044)
DnaD-like helicase loader (CDS_0041)
CDS_0043
CDS_0045
CDS_0048
IMGVR_UViG_7000000144_000002|7000000144|SRS045715_LANL_scaffold_74579 27256:33740(+)
CDS_0043
CDS_0048
IMGVR_UViG_3300007186_000029|3300007186|Ga0103259_100376 27337:33821(+)
2000 nt
DNA, RNA and nucleotide metabolism
other
unknown function