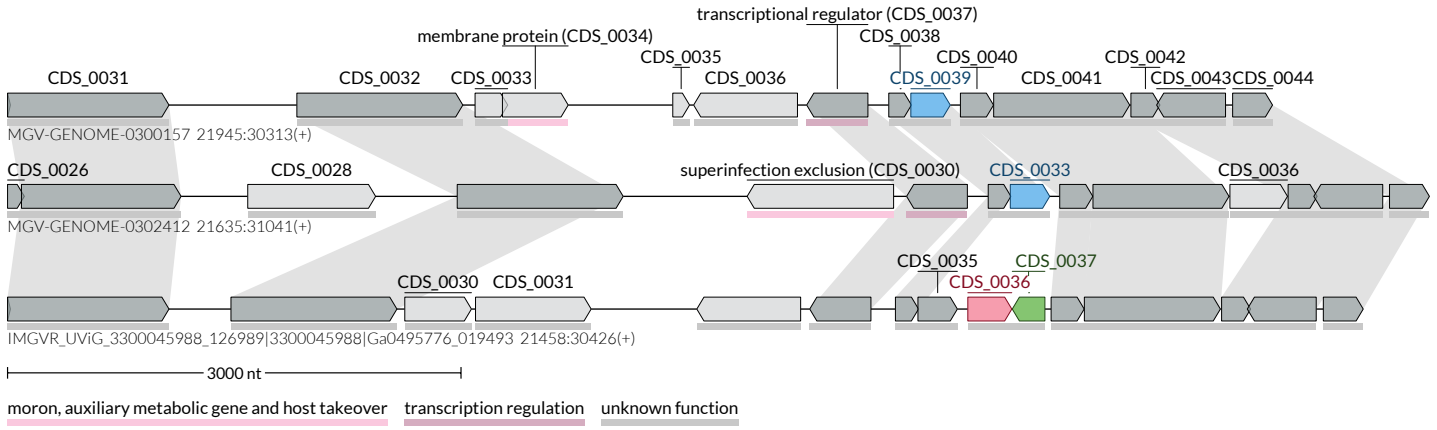
transcriptional regulator (CDS_0037)
membrane protein (CDS_0034)
CDS_0038
CDS_0035
CDS_0040
CDS_0042
CDS_0031
CDS_0032
CDS_0033
CDS_0036
CDS_0039
CDS_0041
CDS_0043
CDS_0044
MGV-GENOME-0300157 21945:30313(+)
CDS_0026
CDS_0028
superinfection exclusion (CDS_0030)
CDS_0033
CDS_0036
MGV-GENOME-0302412 21635:31041(+)
CDS_0035
CDS_0037
CDS_0036
CDS_0030
CDS_0031
IMGVR_UViG_3300045988_126989|3300045988|Ga0495776_019493 21458:30426(+)
3000 nt
moron, auxiliary metabolic gene and host takeover
transcription regulation
unknown function