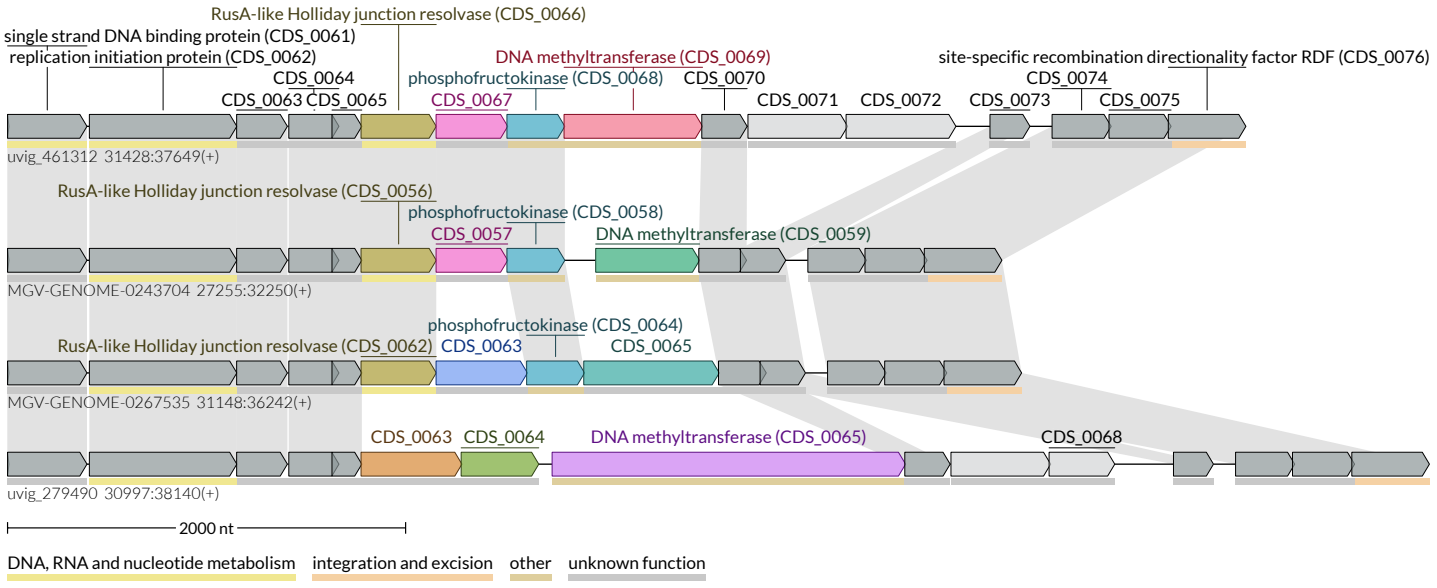
RusA-like Holliday junction resolvase (CDS_0066)
single strand DNA binding protein (CDS_0061)
replication initiation protein (CDS_0062)
CDS_0064
CDS_0063
CDS_0065
DNA methyltransferase (CDS_0069)
phosphofructokinase (CDS_0068)
CDS_0067
CDS_0070
CDS_0071
CDS_0072
site-specific recombination directionality factor RDF (CDS_0076)
CDS_0074
CDS_0073
CDS_0075
uvig_461312 31428:37649(+)
RusA-like Holliday junction resolvase (CDS_0056)
phosphofructokinase (CDS_0058)
CDS_0057
DNA methyltransferase (CDS_0059)
MGV-GENOME-0243704 27255:32250(+)
phosphofructokinase (CDS_0064)
RusA-like Holliday junction resolvase (CDS_0062)
CDS_0063
CDS_0065
MGV-GENOME-0267535 31148:36242(+)
CDS_0063
CDS_0064
DNA methyltransferase (CDS_0065)
CDS_0068
uvig_279490 30997:38140(+)
2000 nt
DNA, RNA and nucleotide metabolism
integration and excision
other
unknown function