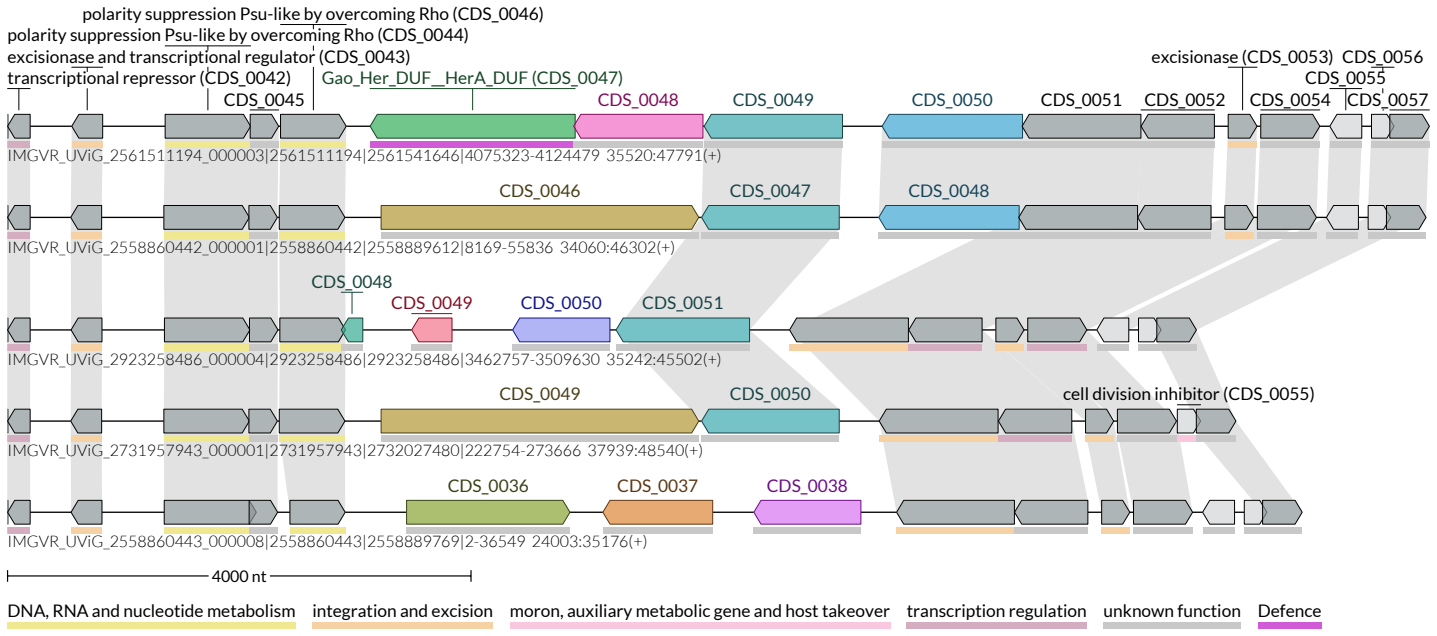
polarity suppression Psu-like by overcoming Rho (CDS_0046)
polarity suppression Psu-like by overcoming Rho (CDS_0044)
excisionase and transcriptional regulator (CDS_0043)
transcriptional repressor (CDS_0042)
CDS_0045
Gao_Her_DUF__HerA_DUF (CDS_0047)
CDS_0048
CDS_0049
CDS_0050
CDS_0051
CDS_0052
excisionase (CDS_0053)
CDS_0054
CDS_0056
CDS_0055
CDS_0057
IMGVR_UViG_2561511194_000003|2561511194|2561541646|4075323-4124479 35520:47791(+)
CDS_0046
CDS_0047
CDS_0048
IMGVR_UViG_2558860442_000001|2558860442|2558889612|8169-55836 34060:46302(+)
CDS_0048
CDS_0049
CDS_0050
CDS_0051
IMGVR_UViG_2923258486_000004|2923258486|2923258486|3462757-3509630 35242:45502(+)
CDS_0049
CDS_0050
cell division inhibitor (CDS_0055)
IMGVR_UViG_2731957943_000001|2731957943|2732027480|222754-273666 37939:48540(+)
CDS_0036
CDS_0037
CDS_0038
IMGVR_UViG_2558860443_000008|2558860443|2558889769|2-36549 24003:35176(+)
4000 nt
DNA, RNA and nucleotide metabolism
integration and excision
moron, auxiliary metabolic gene and host takeover
transcription regulation
unknown function
Defence