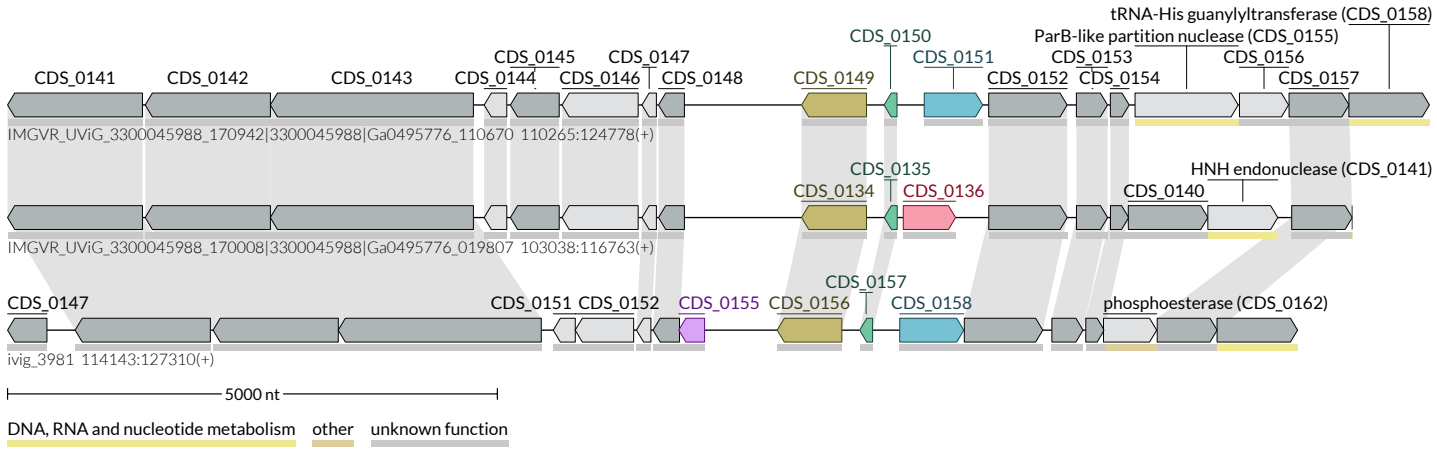
tRNA-His guanylyltransferase (CDS_0158)
CDS_0150
ParB-like partition nuclease (CDS_0155)
CDS_0145
CDS_0147
CDS_0151
CDS_0153
CDS_0156
CDS_0141
CDS_0142
CDS_0143
CDS_0144
CDS_0146
CDS_0148
CDS_0149
CDS_0152
CDS_0154
CDS_0157
IMGVR_UViG_3300045988_170942|3300045988|Ga0495776_110670 110265:124778(+)
CDS_0135
HNH endonuclease (CDS_0141)
CDS_0134
CDS_0136
CDS_0140
IMGVR_UViG_3300045988_170008|3300045988|Ga0495776_019807 103038:116763(+)
CDS_0157
CDS_0147
CDS_0151
CDS_0152
CDS_0155
CDS_0156
CDS_0158
phosphoesterase (CDS_0162)
ivig_3981 114143:127310(+)
5000 nt
DNA, RNA and nucleotide metabolism
other
unknown function