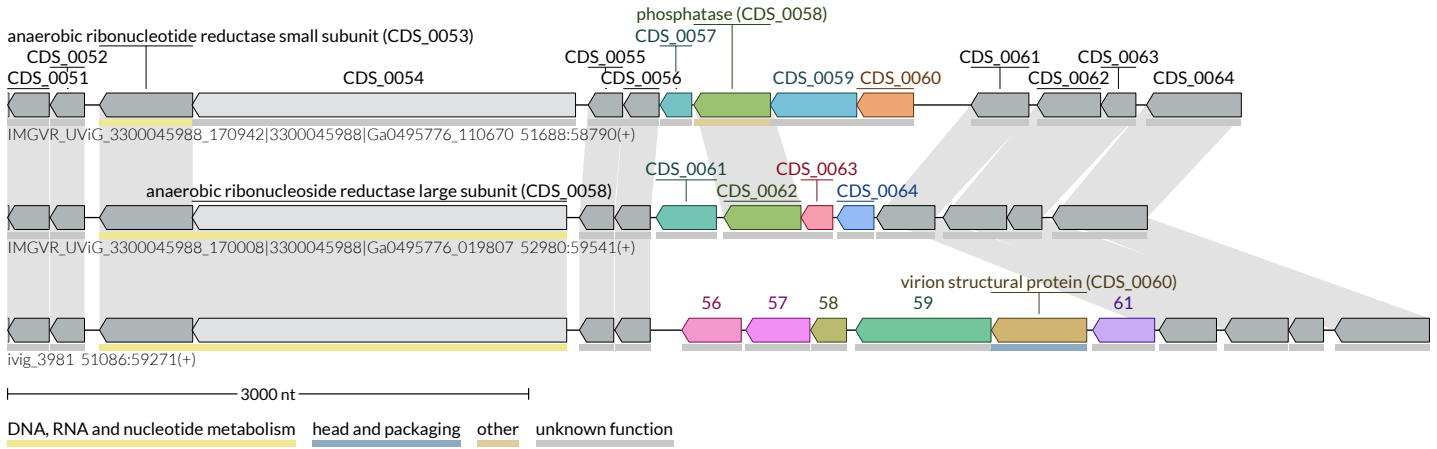
phosphatase (CDS_0058)
anaerobic ribonucleotide reductase small subunit (CDS_0053)
CDS_0057
CDS_0052
CDS_0055
CDS_0061
CDS_0063
CDS_0051
CDS_0054
CDS_0056
CDS_0059
CDS_0060
CDS_0062
CDS_0064
IMGVR_UViG_3300045988_170942|3300045988|Ga0495776_110670 51688:58790(+)
CDS_0061
CDS_0063
anaerobic ribonucleoside reductase large subunit (CDS_0058)
CDS_0062
CDS_0064
IMGVR_UViG_3300045988_170008|3300045988|Ga0495776_019807 52980:59541(+)
virion structural protein (CDS_0060)
56
57
58
59
61
ivig_3981 51086:59271(+)
3000 nt
DNA, RNA and nucleotide metabolism
head and packaging
other
unknown function