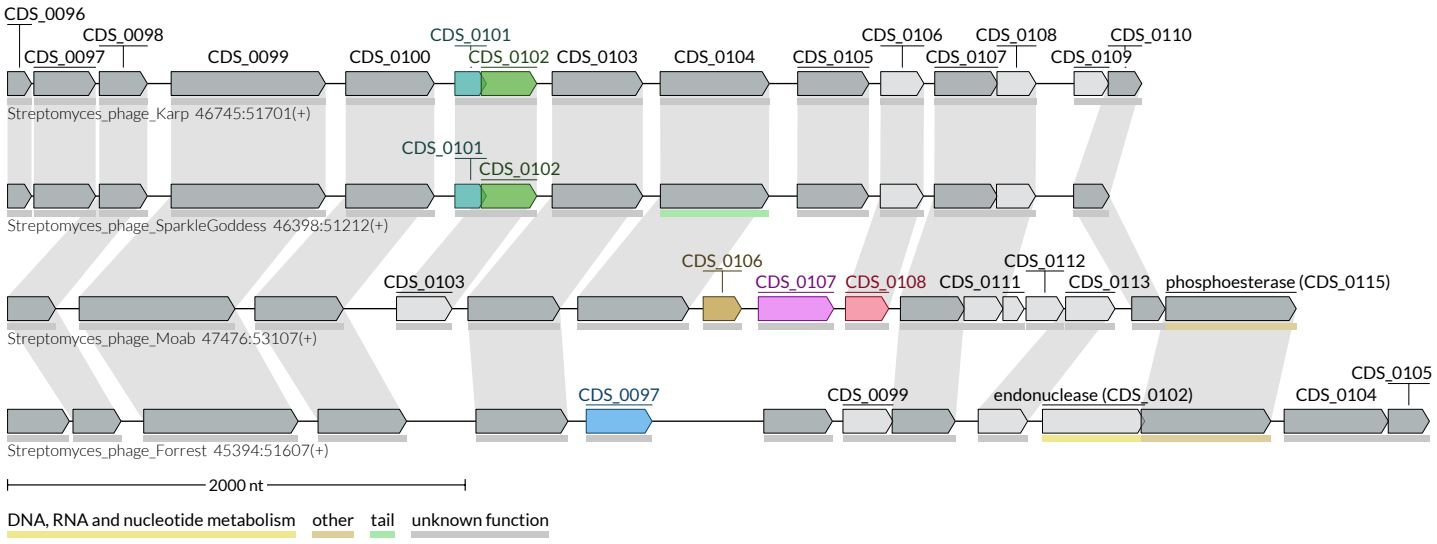
CDS_0096
CDS_0098
CDS_0097
CDS_0099
CDS_0100
CDS_0101
CDS_0102
CDS_0103
CDS_0104
CDS_0105
CDS_0106
CDS_0107
CDS_0108
CDS_0109
CDS_0110
Streptomyces_phage_Karp 46745:51701(+)
CDS_0101
CDS_0102
Streptomyces_phage_SparkleGoddess 46398:51212(+)
CDS_0103
CDS_0106
CDS_0107
CDS_0108
CDS_0111
CDS_0112
CDS_0113
phosphoesterase (CDS_0115)
Streptomyces_phage_Moab 47476:53107(+)
CDS_0097
CDS_0099
endonuclease (CDS_0102)
CDS_0104
CDS_0105
Streptomyces_phage_Forrest 45394:51607(+)
2000 nt
DNA, RNA and nucleotide metabolism
other
tail
unknown function