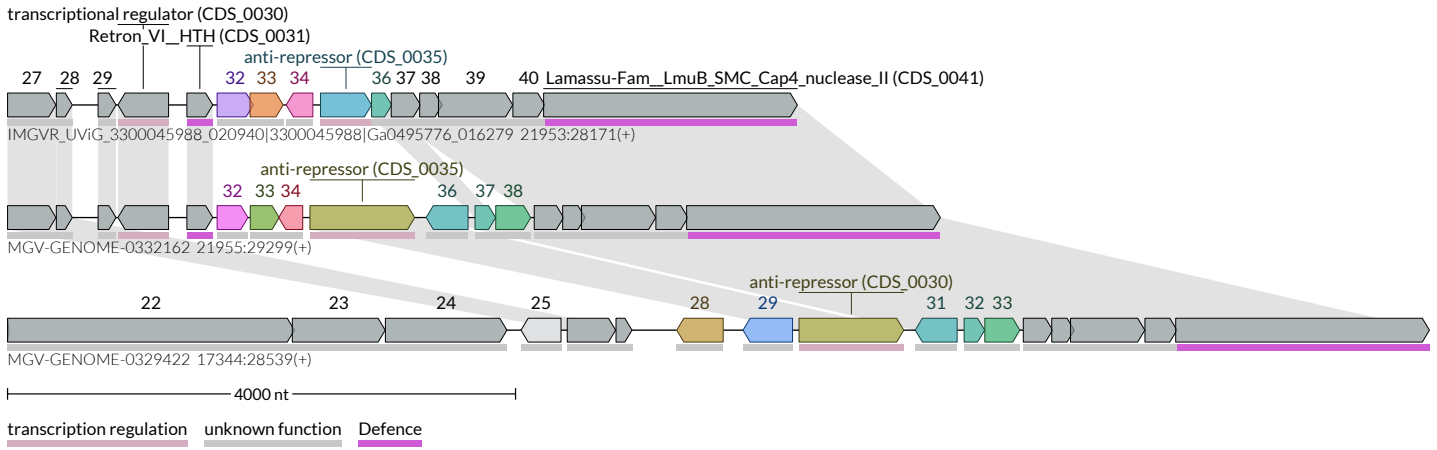
transcriptional regulator (CDS_0030)
Retron_VI__HTH (CDS_0031)
anti-repressor (CDS_0035)
27 28 29 32 33 34 36 37 38 39 40 Lamassu-Fam__LmuB_SMC_Cap4_nuclease_II (CDS_0041)
IMGVR_UViG_3300045988_020940|3300045988|Ga0495776_016279 21953:28171(+)
anti-repressor (CDS_0035)
32 33 34 36 37 38
MGV-GENOME-0332162 21955:29299(+)
anti-repressor (CDS_0030)
22 23 24 25 28 29 31 32 33
MGV-GENOME-0329422 17344:28539(+)
4000 nt
transcription regulation
unknown function
Defence