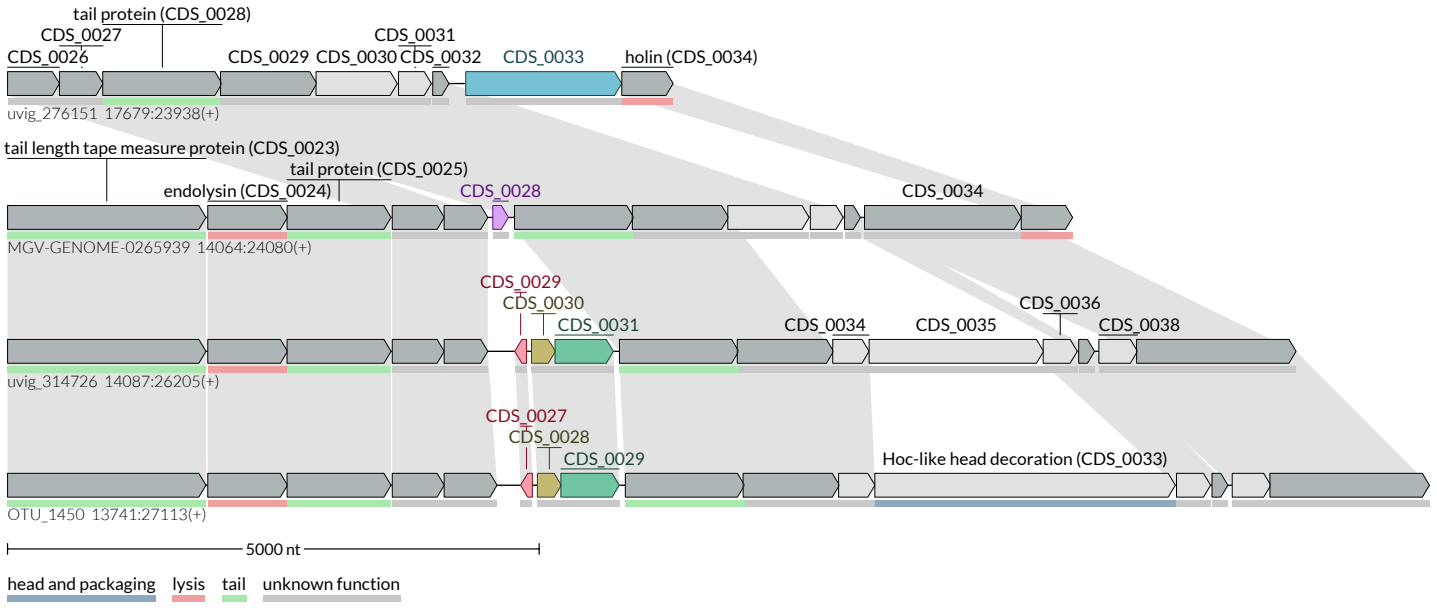
tail protein (CDS_0028)
CDS_0027
CDS_0026
CDS_0031
CDS_0029
CDS_0030
CDS_0032
CDS_0033
holin (CDS_0034)
uvig_276151 17679:23938(+)
tail length tape measure protein (CDS_0023)
tail protein (CDS_0025)
endolysin (CDS_0024)
CDS_0028
CDS_0034
MGV-GENOME-0265939 14064:24080(+)
CDS_0029
CDS_0030
CDS_0031
CDS_0034
CDS_0035
CDS_0036
CDS_0038
uvig_314726 14087:26205(+)
CDS_0027
CDS_0028
CDS_0029
Hoc-like head decoration (CDS_0033)
OTU_1450 13741:27113(+)
5000 nt
head and packaging
lysis
tail
unknown function