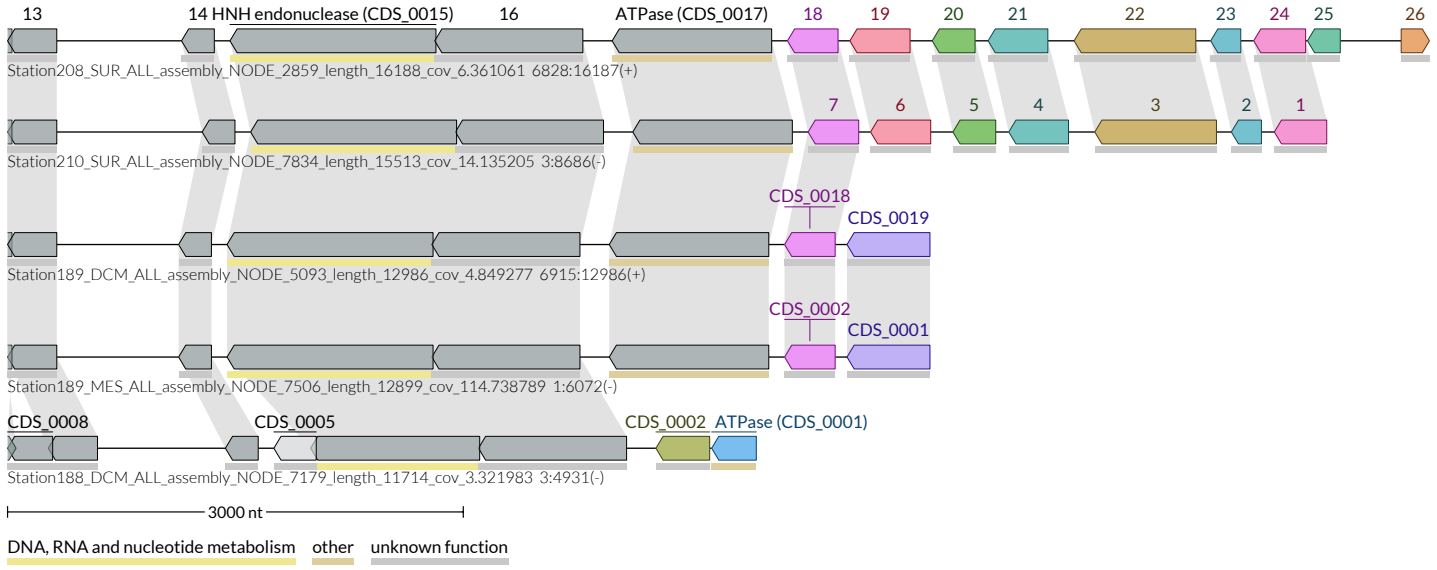
13
14 HNH endonuclease (CDS_0015)
16
ATPase (CDS_0017)
18
19
20
21
22
23
24
25
26
Station208_SUR_ALL_assembly_NODE_2859_length_16188_cov_6.361061 6828:16187(+)
7
6
5
4
3
2
1
Station210_SUR_ALL_assembly_NODE_7834_length_15513_cov_14.135205 3:8686(-)
CDS_0018
CDS_0019
Station189_DCM_ALL_assembly_NODE_5093_length_12986_cov_4.849277 6915:12986(+)
CDS_0002
CDS_0001
Station189_MES_ALL_assembly_NODE_7506_length_12899_cov_114.738789 1:6072(-)
CDS_0008
CDS_0005
CDS_0002
ATPase (CDS_0001)
Station188_DCM_ALL_assembly_NODE_7179_length_11714_cov_3.321983 3:4931(-)
3000 nt
DNA, RNA and nucleotide metabolism
other
unknown function