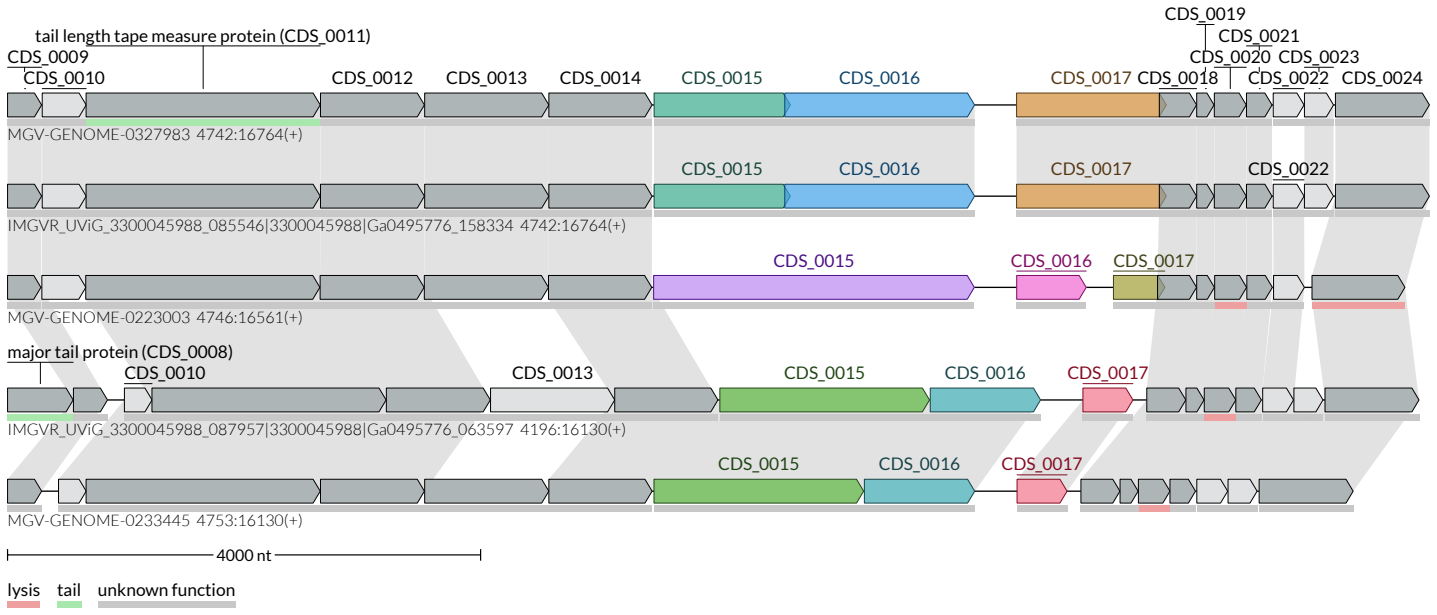
tail length tape measure protein (CDS_0011)
CDS_0009
CDS_0010
CDS_0012
CDS_0013
CDS_0014
CDS_0015
CDS_0016
CDS_0017
CDS_0018
CDS_0019
CDS_0020
CDS_0021
CDS_0022
CDS_0023
CDS_0024
MGV-GENOME-0327983 4742:16764(+)
CDS_0015
CDS_0016
CDS_0017
CDS_0022
IMGVR_UViG_3300045988_085546|3300045988|Ga0495776_158334 4742:16764(+)
CDS_0015
CDS_0016
CDS_0017
MGV-GENOME-0223003 4746:16561(+)
major tail protein (CDS_0008)
CDS_0010
CDS_0013
CDS_0015
CDS_0016
CDS_0017
IMGVR_UViG_3300045988_087957|3300045988|Ga0495776_063597 4196:16130(+)
CDS_0015
CDS_0016
CDS_0017
MGV-GENOME-0233445 4753:16130(+)
4000 nt
lysis
tail
unknown function