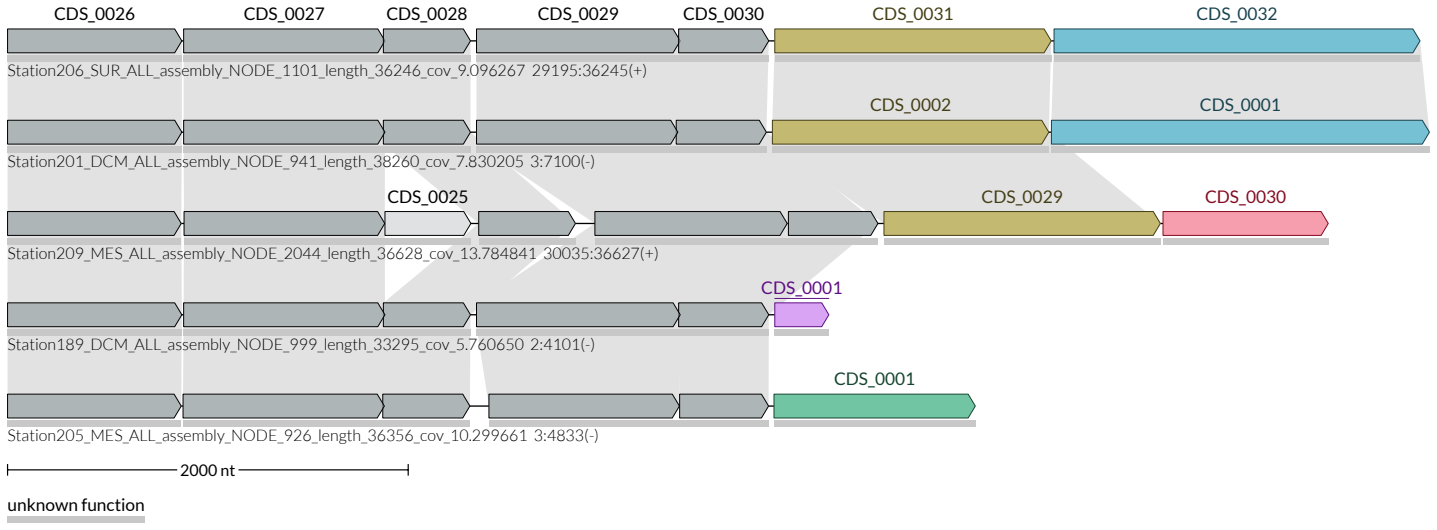
CDS_0026
CDS_0027
CDS_0028
CDS_0029
CDS_0030
CDS_0031
CDS_0032
Station206_SUR_ALL_assembly_NODE_1101_length_36246_cov_9.096267 29195:36245(+)
CDS_0002
CDS_0001
Station201_DCM_ALL_assembly_NODE_941_length_38260_cov_7.830205 3:7100(-)
CDS_0025
CDS_0029
CDS_0030
Station209_MES_ALL_assembly_NODE_2044_length_36628_cov_13.784841 30035:36627(+)
CDS_0001
Station189_DCM_ALL_assembly_NODE_999_length_33295_cov_5.760650 2:4101(-)
CDS_0001
Station205_MES_ALL_assembly_NODE_926_length_36356_cov_10.299661 3:4833(-)
2000 nt
unknown function