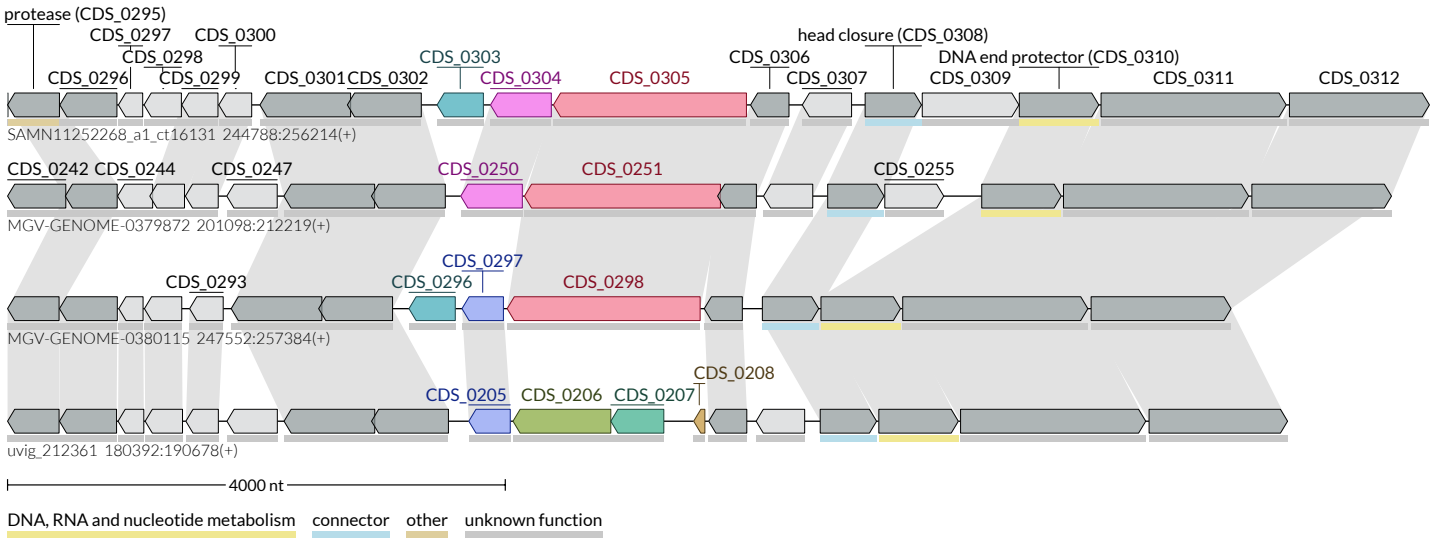
protease (CDS_0295)
CDS_0297
CDS_0300
CDS_0298
CDS_0296
CDS_0299
CDS_0301
CDS_0302
CDS_0303
CDS_0304
CDS_0305
CDS_0306
head closure (CDS_0308)
CDS_0307
DNA end protector (CDS_0310)
CDS_0309
CDS_0311
CDS_0312
SAMN11252268_a1_ct16131 244788:256214(+)
CDS_0242
CDS_0244
CDS_0247
CDS_0250
CDS_0251
CDS_0255
MGV-GENOME-0379872 201098:212219(+)
CDS_0297
CDS_0293
CDS_0296
CDS_0298
MGV-GENOME-0380115 247552:257384(+)
CDS_0208
CDS_0205
CDS_0206
CDS_0207
uvig_212361 180392:190678(+)
4000 nt
DNA, RNA and nucleotide metabolism
connector
other
unknown function