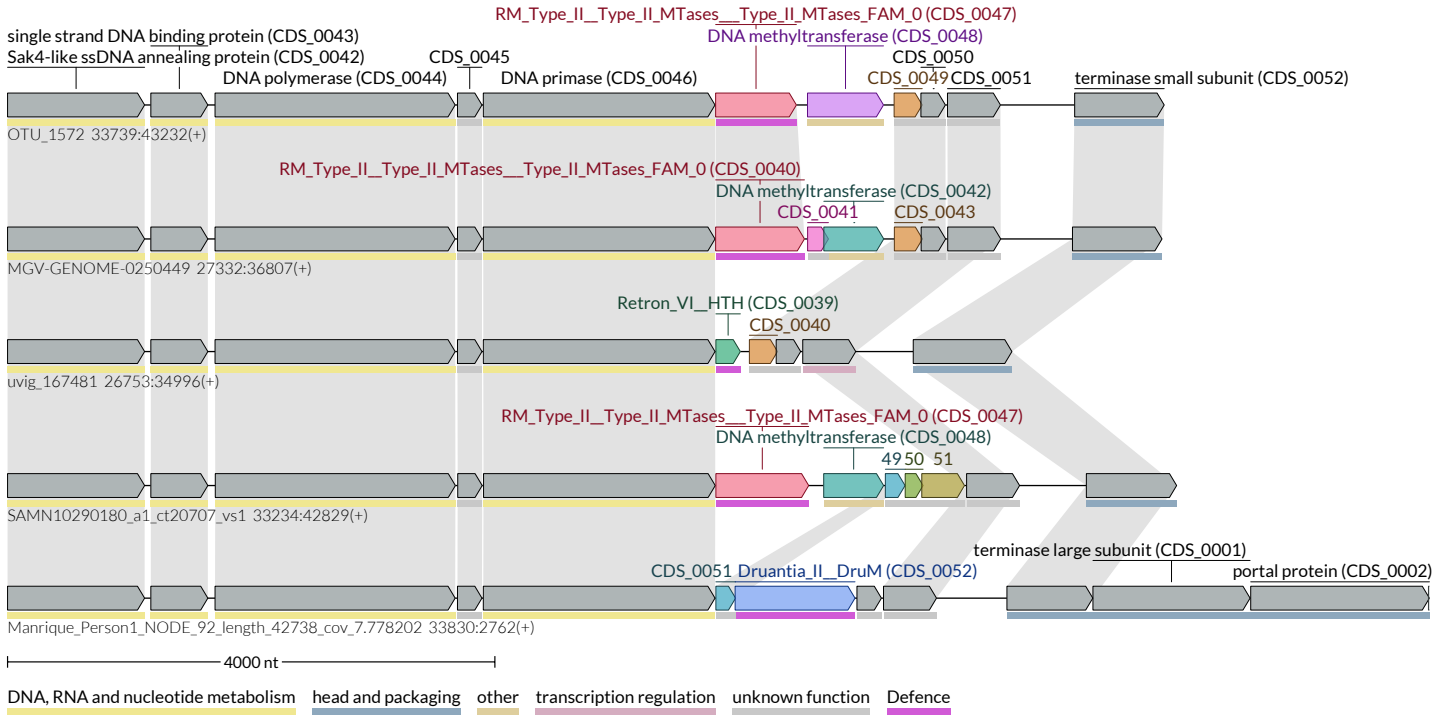
RM_Type_II__Type_II_MTases___Type_II_MTases_FAM_0 (CDS_0047)
DNA methyltransferase (CDS_0048)
single strand DNA binding protein (CDS_0043)
Sak4-like ssDNA annealing protein (CDS_0042)
CDS_0045
DNA polymerase (CDS_0044)
DNA primase (CDS_0046)
CDS_0050
CDS_0049
CDS_0051
terminase small subunit (CDS_0052)
OTU_1572 33739:43232(+)
RM_Type_II__Type_II_MTases___Type_II_MTases_FAM_0 (CDS_0040)
DNA methyltransferase (CDS_0042)
CDS_0041
CDS_0043
MGV-GENOME-0250449 27332:36807(+)
Retron_VI__HTH (CDS_0039)
CDS_0040
uvig_167481 26753:34996(+)
RM_Type_II__Type_II_MTases___Type_II_MTases_FAM_0 (CDS_0047)
DNA methyltransferase (CDS_0048)
49
50
51
SAMN10290180_a1_ct20707_vs1 33234:42829(+)
terminase large subunit (CDS_0001)
CDS_0051
Druantia_II__DruM (CDS_0052)
portal protein (CDS_0002)
Manrique_Person1_NODE_92_length_42738_cov_7.778202 33830:2762(+)
4000 nt
DNA, RNA and nucleotide metabolism
head and packaging
other
transcription regulation
unknown function
Defence