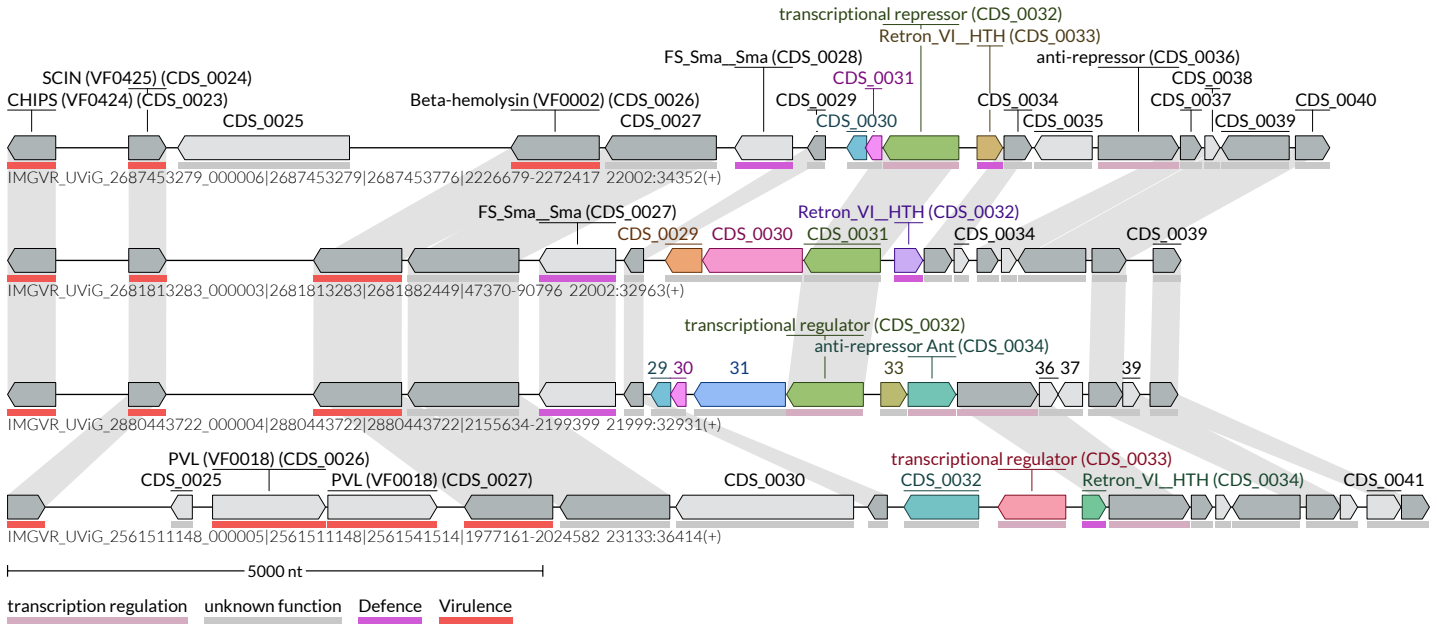
transcriptional repressor (CDS_0032)
Retron_VI__HTH (CDS_0033)
FS_Sma__Sma (CDS_0028)
anti-repressor (CDS_0036)
SCIN (VF0425) (CDS_0024)
CDS_0031
CDS_0038
CHIPS (VF0424) (CDS_0023)
Beta-hemolysin (VF0002) (CDS_0026)
CDS_0029
CDS_0034
CDS_0037
CDS_0040
CDS_0025
CDS_0027
CDS_0030
CDS_0035
CDS_0039
IMGVR_UViG_2687453279_000006|2687453279|2687453776|2226679-2272417 22002:34352(+)
FS_Sma__Sma (CDS_0027)
Retron_VI__HTH (CDS_0032)
CDS_0029
CDS_0030
CDS_0031
CDS_0034
CDS_0039
IMGVR_UViG_2681813283_000003|2681813283|2681882449|47370-90796 22002:32963(+)
transcriptional regulator (CDS_0032)
anti-repressor Ant (CDS_0034)
29
30
31
33
36
37
39
IMGVR_UViG_2880443722_000004|2880443722|2880443722|2155634-2199399 21999:32931(+)
PVL (VF0018) (CDS_0026)
transcriptional regulator (CDS_0033)
CDS_0025
PVL (VF0018) (CDS_0027)
CDS_0030
CDS_0032
Retron_VI__HTH (CDS_0034)
CDS_0041
IMGVR_UViG_2561511148_000005|2561511148|2561541514|1977161-2024582 23133:36414(+)
5000 nt
transcription regulation
unknown function
Defence
Virulence