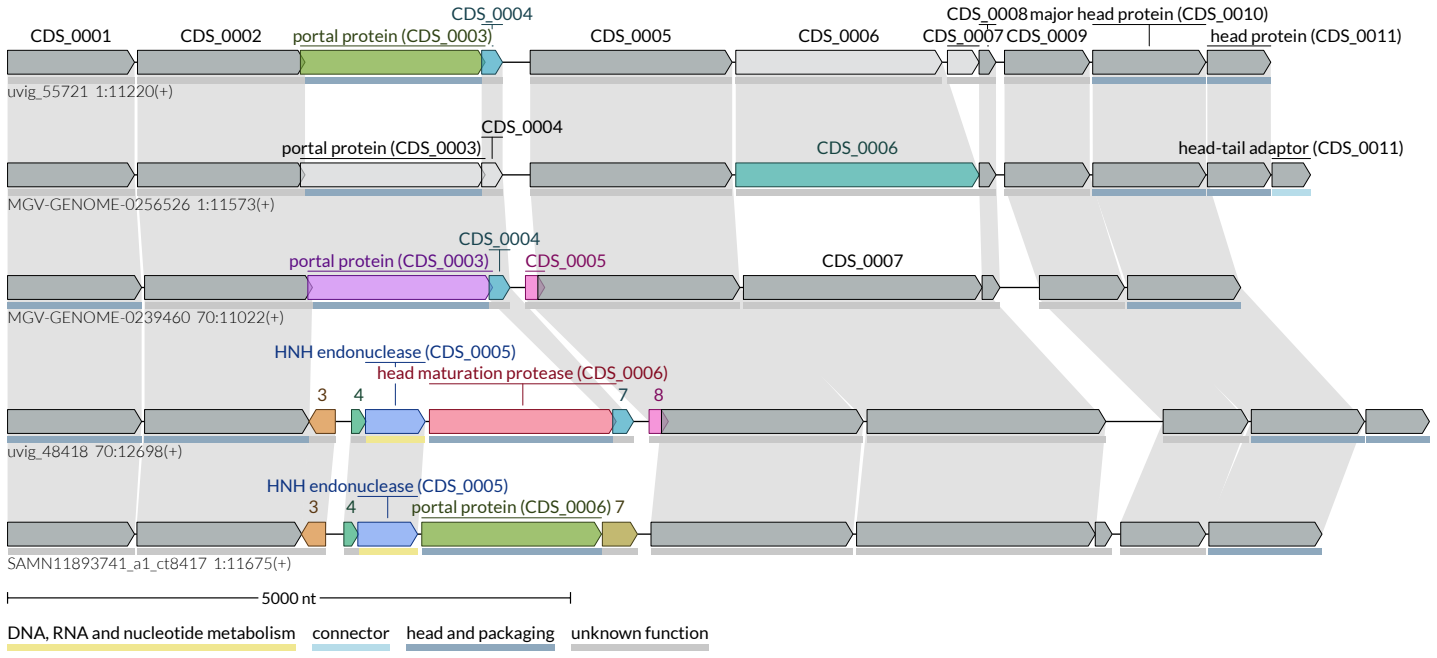
CDS_0001
CDS_0002
portal protein (CDS_0003)
CDS_0004
CDS_0005
CDS_0006
CDS_0007
CDS_0008
major head protein (CDS_0010)
CDS_0009
head protein (CDS_0011)
uvig_55721 1:11220(+)
portal protein (CDS_0003)
CDS_0004
CDS_0006
head-tail adaptor (CDS_0011)
MGV-GENOME-0256526 1:11573(+)
CDS_0004
portal protein (CDS_0003)
CDS_0005
CDS_0007
MGV-GENOME-0239460 70:11022(+)
HNH endonuclease (CDS_0005)
head maturation protease (CDS_0006)
3
4
7
8
uvig_48418 70:12698(+)
HNH endonuclease (CDS_0005)
3
4
portal protein (CDS_0006)
7
SAMN11893741_a1_ct8417 1:11675(+)
5000 nt
DNA, RNA and nucleotide metabolism
connector
head and packaging
unknown function