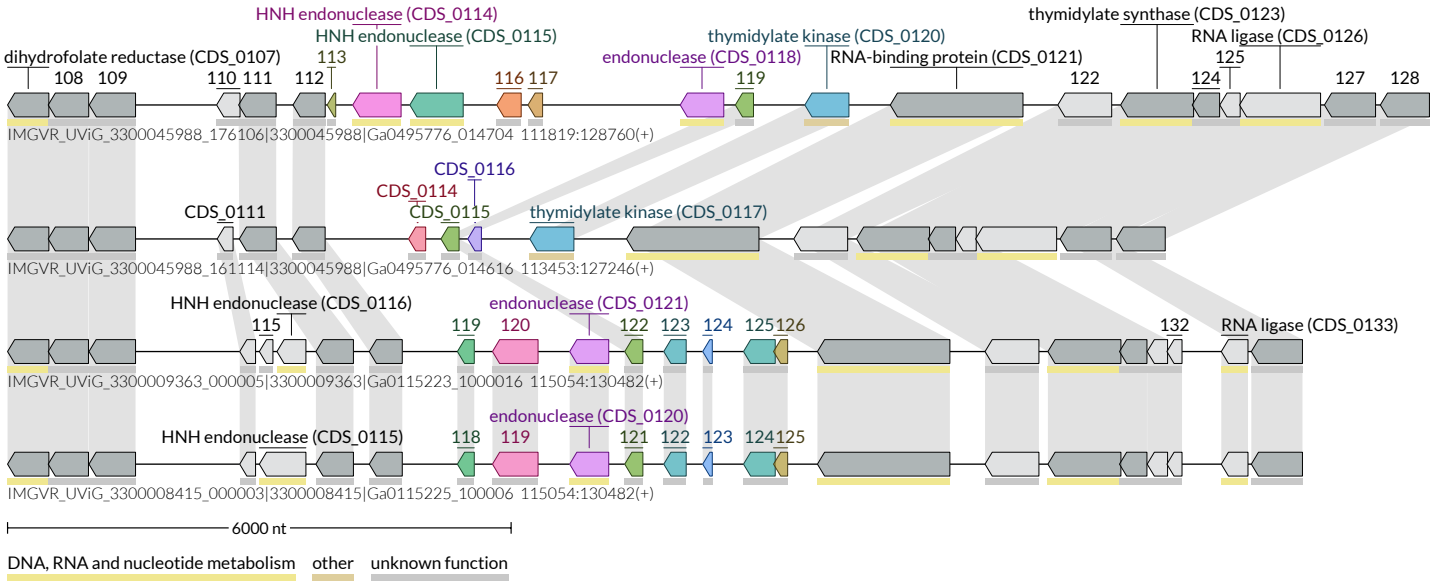
HNH endonuclease (CDS_0114)
HNH endonuclease (CDS_0115)
thymidylate kinase (CDS_0120)
thymidylate synthase (CDS_0123)
RNA ligase (CDS_0126)
dihydrofolate reductase (CDS_0107)
endonuclease (CDS_0118)
RNA-binding protein (CDS_0121)
108 109 110 111 112 113 116 117 119 122 124 125 127 128
IMGVR_UViG_3300045988_176106|3300045988|Ga0495776_014704 111819:128760(+)
CDS_0116
CDS_0114
CDS_0111
CDS_0115
thymidylate kinase (CDS_0117)
IMGVR_UViG_3300045988_161114|3300045988|Ga0495776_014616 113453:127246(+)
HNH endonuclease (CDS_0116)
endonuclease (CDS_0121)
115 119 120 122 123 124 125 126 132
RNA ligase (CDS_0133)
IMGVR_UViG_3300009363_000005|3300009363|Ga0115223_1000016 115054:130482(+)
endonuclease (CDS_0120)
HNH endonuclease (CDS_0115)
118 119 121 122 123 124 125
IMGVR_UViG_3300008415_000003|3300008415|Ga0115225_100006 115054:130482(+)
6000 nt
DNA, RNA and nucleotide metabolism
other
unknown function