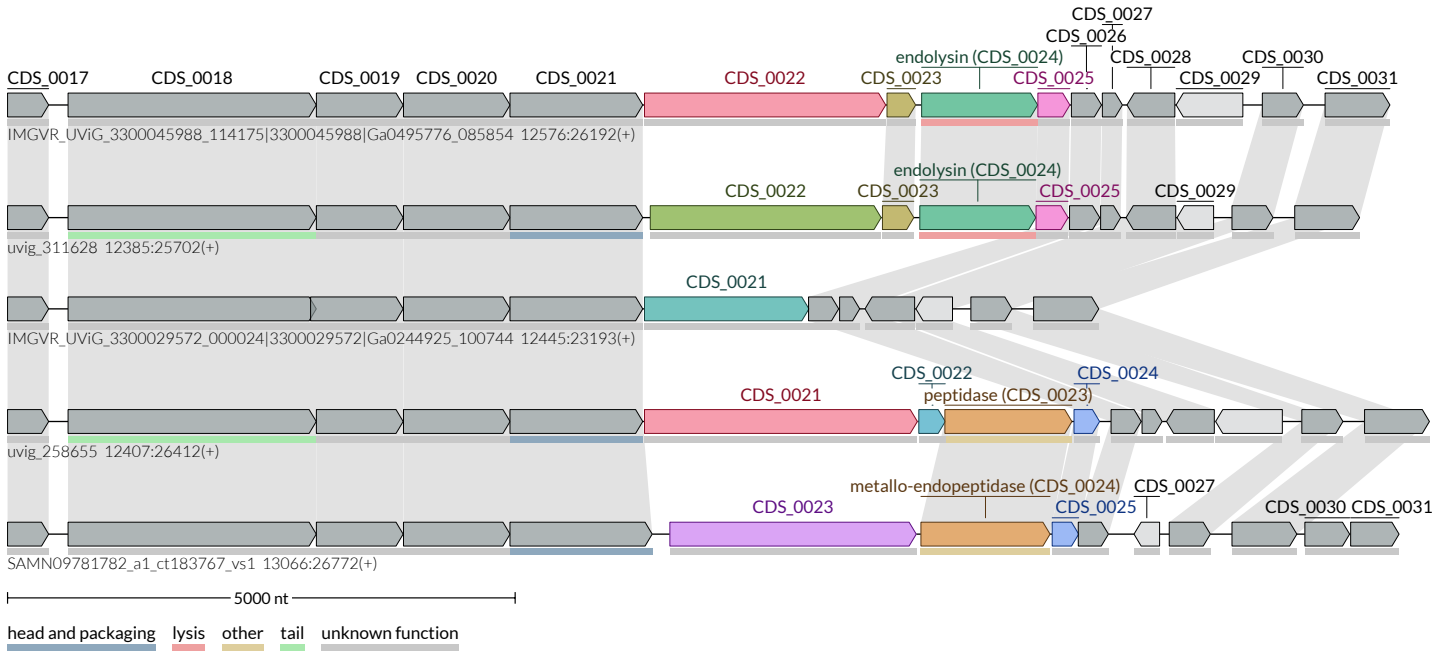
CDS_0027
CDS_0026
endolysin (CDS_0024)
CDS_0028
CDS_0030
CDS_0017
CDS_0018
CDS_0019
CDS_0020
CDS_0021
CDS_0022
CDS_0023
CDS_0025
CDS_0029
CDS_0031
IMGVR_UViG_3300045988_114175|3300045988|Ga0495776_085854 12576:26192(+)
endolysin (CDS_0024)
CDS_0022
CDS_0023
CDS_0025
CDS_0029
uvig_311628 12385:25702(+)
CDS_0021
IMGVR_UViG_3300029572_000024|3300029572|Ga0244925_100744 12445:23193(+)
CDS_0022
CDS_0024
CDS_0021
peptidase (CDS_0023)
uvig_258655 12407:26412(+)
metallo-endopeptidase (CDS_0024)
CDS_0027
CDS_0023
CDS_0025
CDS_0030 CDS_0031
SAMN09781782_a1_ct183767_vs1 13066:26772(+)
5000 nt
head and packaging
lysis
other
tail
unknown function