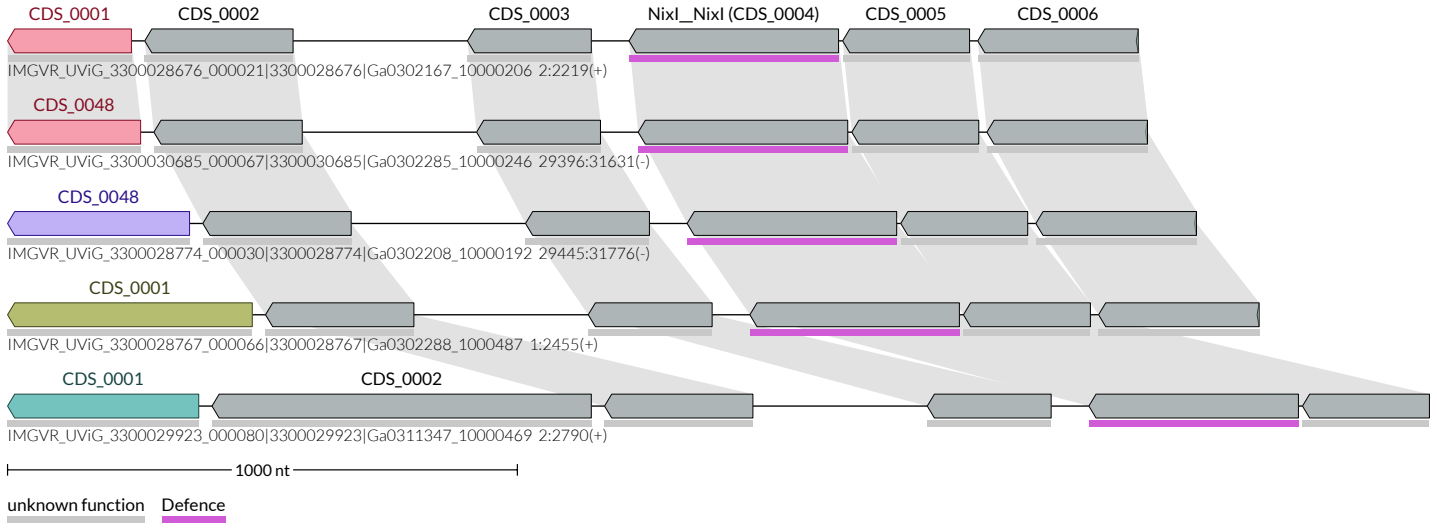
CDS_0001
CDS_0002
CDS_0003
NixI__NixI (CDS_0004)
CDS_0005
CDS_0006
IMGVR_UViG_3300028676_000021|3300028676|Ga0302167_10000206 2:2219(+)
CDS_0048
IMGVR_UViG_3300030685_000067|3300030685|Ga0302285_10000246 29396:31631(-)
CDS_0048
IMGVR_UViG_3300028774_000030|3300028774|Ga0302208_10000192 29445:31776(-)
CDS_0001
IMGVR_UViG_3300028767_000066|3300028767|Ga0302288_1000487 1:2455(+)
CDS_0001
CDS_0002
IMGVR_UViG_3300029923_000080|3300029923|Ga0311347_10000469 2:2790(+)
1000 nt
unknown function
Defence