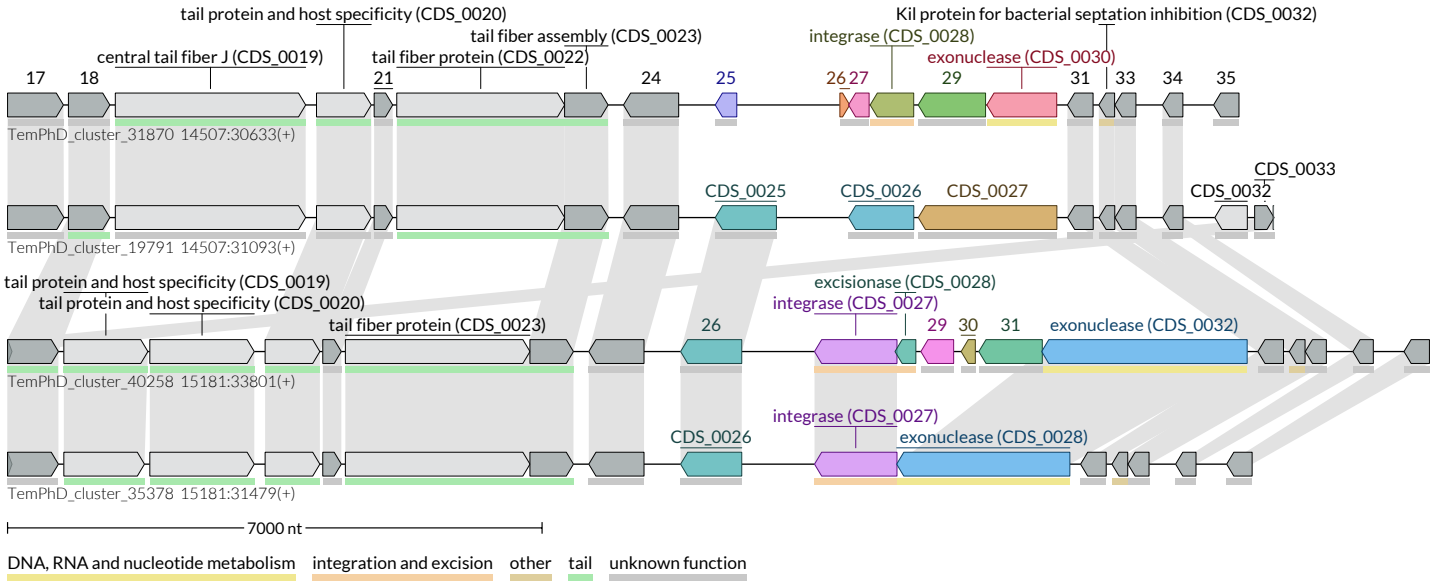
tail protein and host specificity (CDS_0020)
central tail fiber J (CDS_0019)
tail fiber assembly (CDS_0023)
tail fiber protein (CDS_0022)
integrase (CDS_0028)
Kil protein for bacterial septation inhibition (CDS_0032)
exonuclease (CDS_0030)
17
18
21
24
25
26
27
29
31
33
34
35
TemPhD_cluster_31870 14507:30633(+)
CDS_0025
CDS_0026
CDS_0027
CDS_0033
CDS_0032
TemPhD_cluster_19791 14507:31093(+)
tail protein and host specificity (CDS_0019)
tail protein and host specificity (CDS_0020)
tail fiber protein (CDS_0023)
excisionase (CDS_0028)
integrase (CDS_0027)
26
29
30
31
exonuclease (CDS_0032)
TemPhD_cluster_40258 15181:33801(+)
integrase (CDS_0027)
CDS_0026
exonuclease (CDS_0028)
TemPhD_cluster_35378 15181:31479(+)
7000 nt
DNA, RNA and nucleotide metabolism
integration and excision
other
tail
unknown function