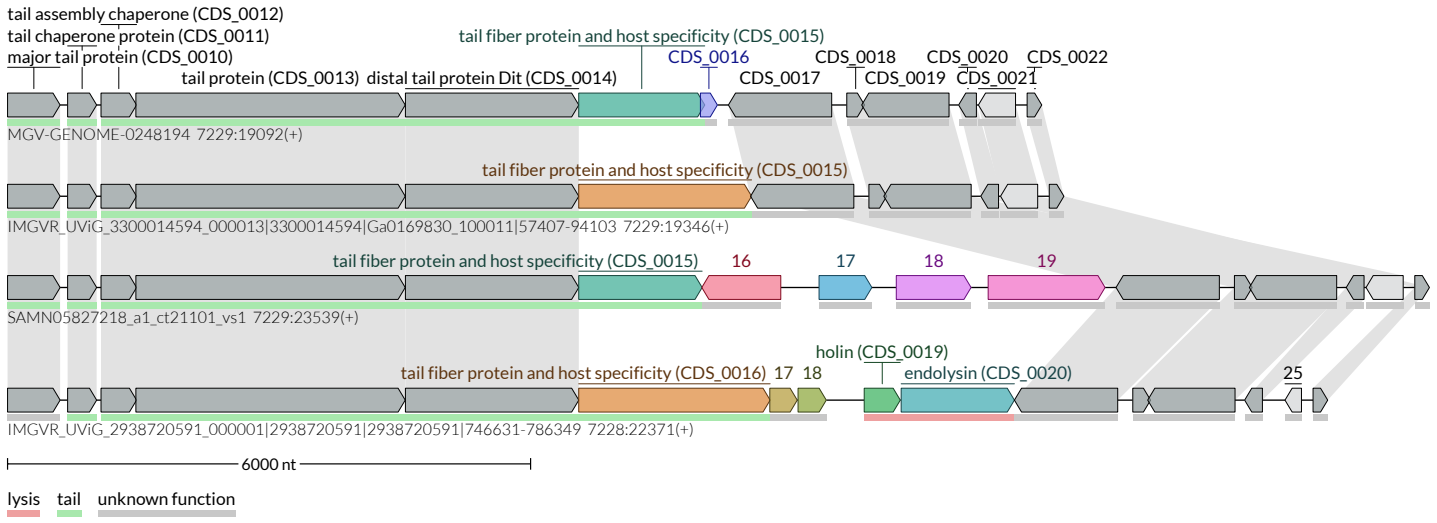
tail assembly chaperone (CDS_0012)
tail chaperone protein (CDS_0011)
major tail protein (CDS_0010)
tail protein (CDS_0013)
distal tail protein Dit (CDS_0014)
tail fiber protein and host specificity (CDS_0015)
CDS_0016
CDS_0017
CDS_0018
CDS_0019
CDS_0020
CDS_0021
CDS_0022
MGV-GENOME-0248194 7229:19092(+)
tail fiber protein and host specificity (CDS_0015)
IMGVR_UViG_3300014594_000013|3300014594|Ga0169830_100011|57407-94103 7229:19346(+)
tail fiber protein and host specificity (CDS_0015)
16
17
18
19
SAMN05827218_a1_ct21101_vs1 7229:23539(+)
holin (CDS_0019)
tail fiber protein and host specificity (CDS_0016)
17
18
endolysin (CDS_0020)
25
IMGVR_UViG_2938720591_000001|2938720591|2938720591|746631-786349 7228:22371(+)
6000 nt
lysis
tail
unknown function