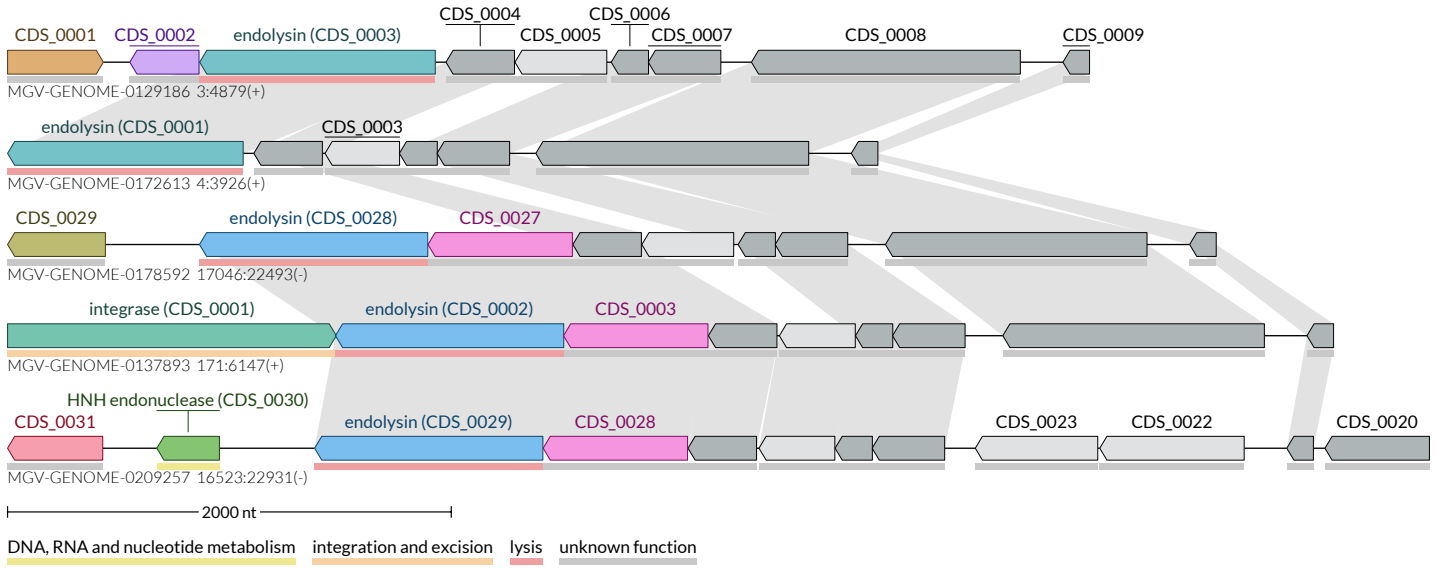
CDS_0001
CDS_0002
endolysin (CDS_0003)
CDS_0004
CDS_0005
CDS_0006
CDS_0007
CDS_0008
CDS_0009
MGV-GENOME-0129186 3:4879(+)
endolysin (CDS_0001)
CDS_0003
MGV-GENOME-0172613 4:3926(+)
CDS_0029
endolysin (CDS_0028)
CDS_0027
MGV-GENOME-0178592 17046:22493(-)
integrase (CDS_0001)
endolysin (CDS_0002)
CDS_0003
MGV-GENOME-0137893 171:6147(+)
HNH endonuclease (CDS_0030)
CDS_0031
endolysin (CDS_0029)
CDS_0028
CDS_0023
CDS_0022
CDS_0020
MGV-GENOME-0209257 16523:22931(-)
2000 nt
DNA, RNA and nucleotide metabolism
integration and excision
lysis
unknown function