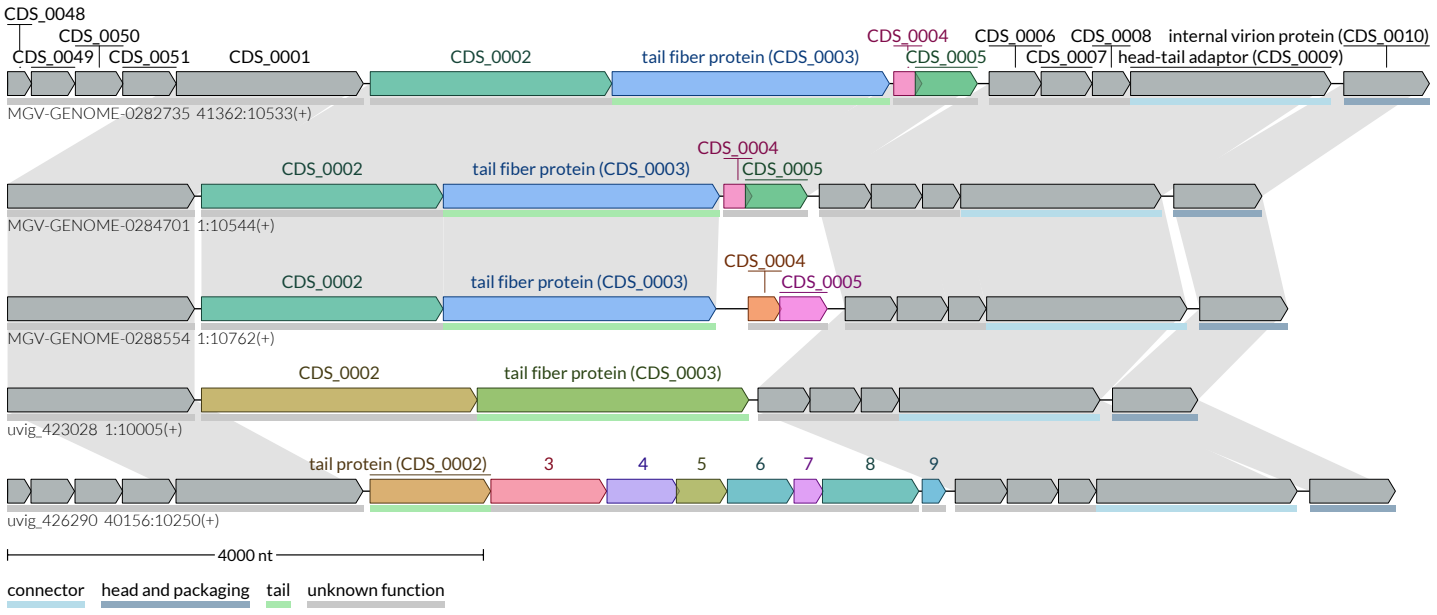
CDS_0048
CDS_0050
CDS_0049
CDS_0051
CDS_0001
CDS_0002
tail fiber protein (CDS_0003)
CDS_0004
CDS_0005
CDS_0006
CDS_0007
CDS_0008
head-tail adaptor (CDS_0009)
internal virion protein (CDS_0010)
MGV-GENOME-0282735 41362:10533(+)
CDS_0002
tail fiber protein (CDS_0003)
CDS_0004
CDS_0005
MGV-GENOME-0284701 1:10544(+)
CDS_0002
tail fiber protein (CDS_0003)
CDS_0004
CDS_0005
MGV-GENOME-0288554 1:10762(+)
CDS_0002
tail fiber protein (CDS_0003)
uvig_423028 1:10005(+)
tail protein (CDS_0002)
3
4
5
6
7
8
9
uvig_426290 40156:10250(+)
4000 nt
connector
head and packaging
tail
unknown function