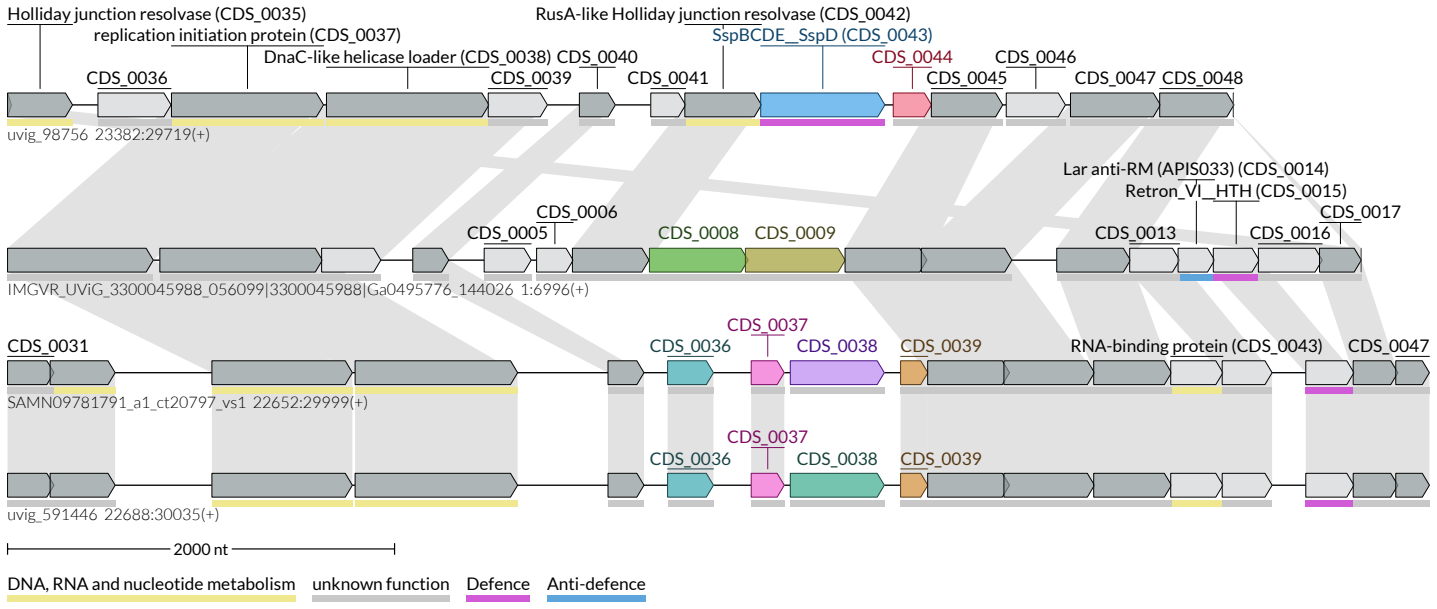
Holliday junction resolvase (CDS_0035)
replication initiation protein (CDS_0037)
DnaC-like helicase loader (CDS_0038)
CDS_0040
RusA-like Holliday junction resolvase (CDS_0042)
SspBCDE_SspD (CDS_0043)
CDS_0044
CDS_0046
CDS_0036
CDS_0039
CDS_0041
CDS_0045
CDS_0047
CDS_0048
uvig_98756 23382:29719(+)
Lar anti-RM (APIS033) (CDS_0014)
Retron_VI_HTH (CDS_0015)
CDS_0017
CDS_0006
CDS_0005
CDS_0008
CDS_0009
CDS_0013
CDS_0016
IMGVR_UViG_3300045988_056099|3300045988|Ga0495776_144026 1:6996(+)
CDS_0037
CDS_0031
CDS_0036
CDS_0038
CDS_0039
RNA-binding protein (CDS_0043)
CDS_0047
SAMN09781791_a1_ct20797_vs1 22652:29999(+)
CDS_0037
CDS_0036
CDS_0038
CDS_0039
uvig_591446 22688:30035(+)
2000 nt
DNA, RNA and nucleotide metabolism
unknown function
Defence
Anti-defence