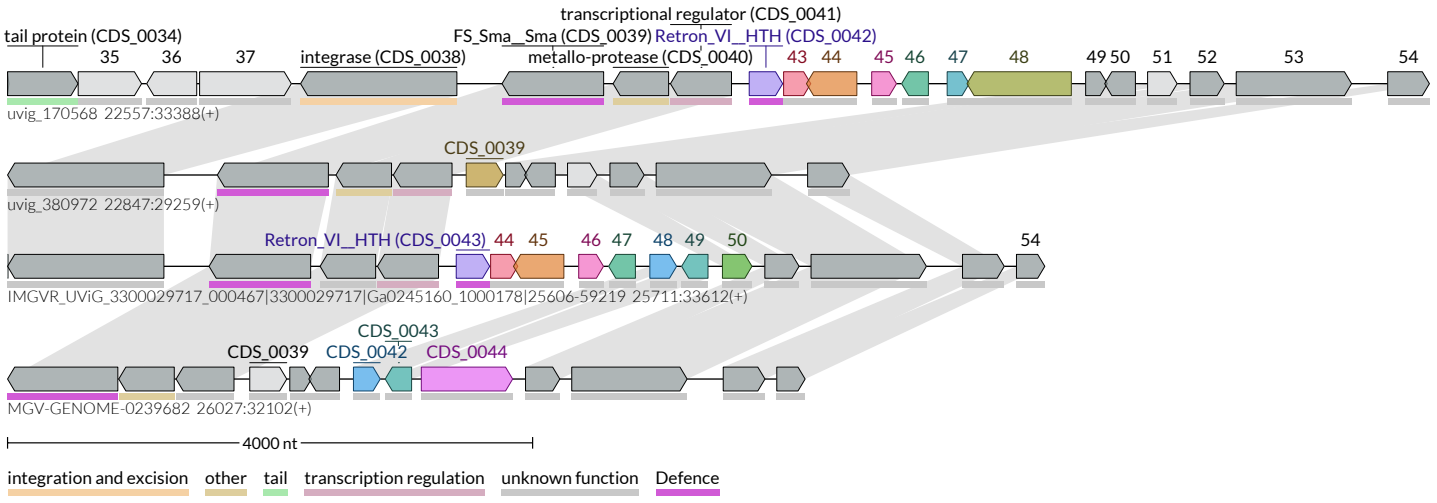
transcriptional regulator (CDS_0041)
tail protein (CDS_0034)
35
36
37
integrase (CDS_0038)
FS_Sma__Sma (CDS_0039)
metallo-protease (CDS_0040)
Retron_VI__HTH (CDS_0042)
43
44
45
46
47
48
49
50
51
52
53
54
uvig_170568 22557:33388(+)
CDS_0039
uvig_380972 22847:29259(+)
Retron_VI__HTH (CDS_0043)
44
45
46
47
48
49
50
54
IMGVR_UViG_3300029717_000467|3300029717|Ga0245160_1000178|25606-59219 25711:33612(+)
CDS_0043
CDS_0039
CDS_0042
CDS_0044
MGV-GENOME-0239682 26027:32102(+)
4000 nt
integration and excision
other
tail
transcription regulation
unknown function
Defence