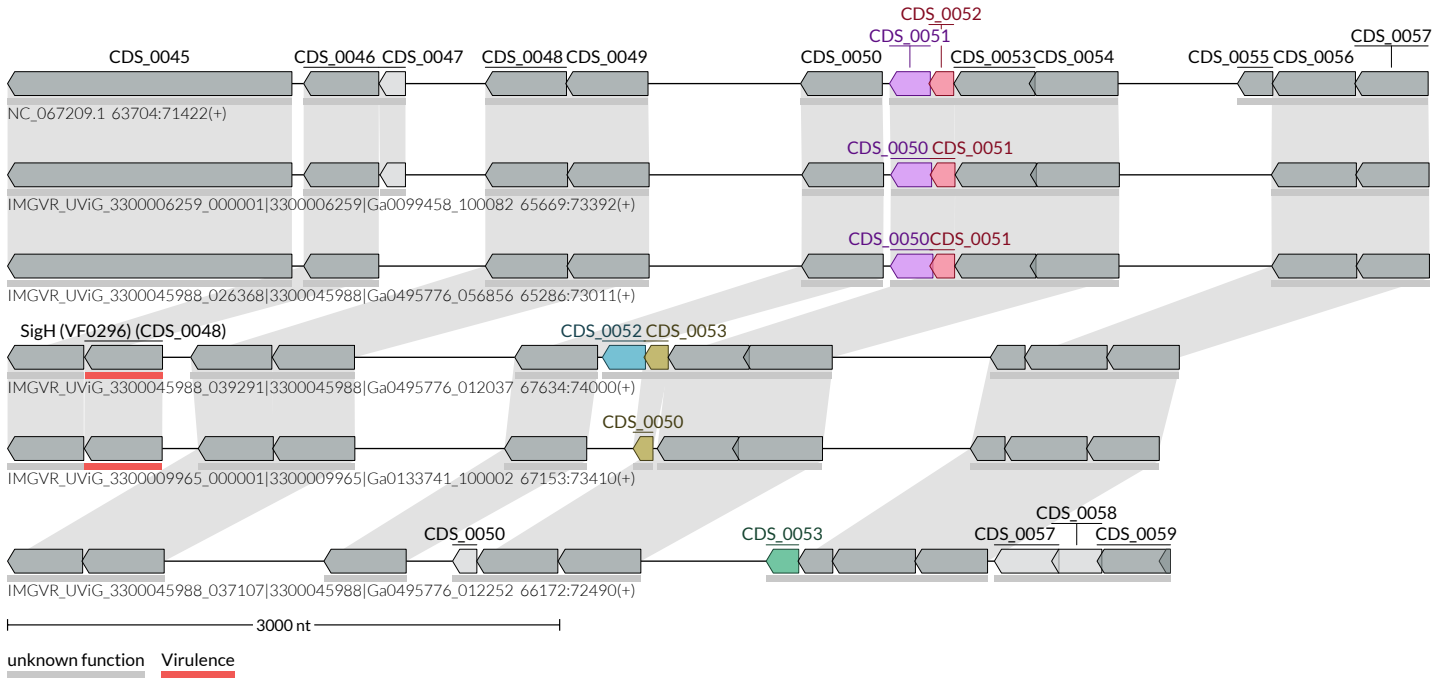
CDS_0052
CDS_0051
CDS_0057
CDS_0045
CDS_0046
CDS_0047
CDS_0048
CDS_0049
CDS_0050
CDS_0053
CDS_0054
CDS_0055
CDS_0056
NC_067209.1 63704:71422(+)
CDS_0050
CDS_0051
IMGVR_UViG_3300006259_000001|3300006259|Ga0099458_100082 65669:73392(+)
CDS_0050
CDS_0051
IMGVR_UViG_3300045988_026368|3300045988|Ga0495776_056856 65286:73011(+)
SigH (VF0296) (CDS_0048)
CDS_0052
CDS_0053
IMGVR_UViG_3300045988_039291|3300045988|Ga0495776_012037 67634:74000(+)
CDS_0050
IMGVR_UViG_3300009965_000001|3300009965|Ga0133741_100002 67153:73410(+)
CDS_0058
CDS_0050
CDS_0053
CDS_0057
CDS_0059
IMGVR_UViG_3300045988_037107|3300045988|Ga0495776_012252 66172:72490(+)
3000 nt
unknown function
Virulence